FAA160AA

Nikon FA

ニコン FA

REPAIR MANUAL

修 理 指 針

Nikon

NIPPON KOGAKU K.K.

Tokyo, Japan

SPECIFICATIONS & MECHANISM

Contents Page

[1] SRECIFICATIONS M1

[2] MECHANISM OUTLINE

Mirror raise mechanism M7

Mirror down mechanism M9

Viewfinder display M11

1. SPECIFICATIONS

Type of camera: Electronically controlled 35mm single-lens reflex

Usable film: 35mm film

Picture format: 24mm x 36mm

Standard lenses: AI-S Nikkor 50mm F1.2, 50mm F1.4, 50mm F1.8

Lens mount: Nikon bayonet mount

Maximum aperture index: Automatic with AI-S and AI Nikkor lenses

Shutter: Electromagnetically controlled vertical-travel, metal focal plane shutter with titanium curtains

Shutter speeds: Stepless speeds from 1/4000 to 1 sec. in P and A auto-exposure modes; 13 speeds from 1/4000 to 1 sec. on S and M; mechanically controlled, 1/250 sec. at M 250 setting and long exposure at B setting available

Exposure control: Three exposure modes: P (programmed), S (shutter-priority) and A (aperture-priority); M (manual) exposure mode selected via Mode changeover knob

P mode: With minimum aperture setting of the lens, the FA automatically selects the optimum combination of shutter speed and lens aperture settings for correct exposure by the prearranged program of its microcomputer
Also, the FA's microcomputer activates the High-Speed program automatically via Focal length (Fmm) signal when Nikkor or Nikon Series E lenses of 135mm * or longer are used

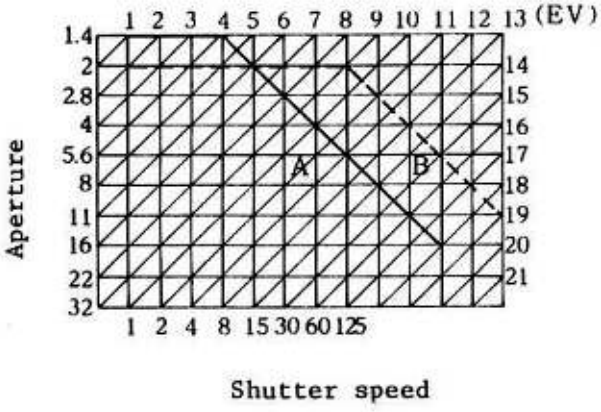

* High-Speed program operable lenses are AI-S Nikkor, Nikon Series E lenses and new teleconverters for AI-S type

ASA/ISO 100
A: AI-S Nikkor 50mm F1.4 lens in use
B: AI-S Nikkor 135mm F2 lens in use

S mode: With minimum aperture setting of the lens, when a shutter speed is set, the FA automatically picks the matching lens aperture steplessly for correct exposure.

A mode: When a aperture of the lens is set, the FA automatically picks the matching stepless shutter speed for correct exposure.

M mode: Both aperture and shutter speed are set manually.

Viewfinder: Fixed eyelevel pentaprism type

Frame coverage: Approx. 93%

Finder magnification: Approx. 0.80X with 50mm lens set at infinity

Finder diopter: -1±0.5 dpt.

Focusing screen: Interchangeable matte/fresnel focusing screen with central split-image rangefinder spot and microprism collar (Nikon Type K2) as standard; two other types of screens available optionally (Type B2 and E2)

How to change focusing screens: By pulling the focusing screen, release latch at the top front of the mirror box. A special tweezers is provided for screens change.

View finder information

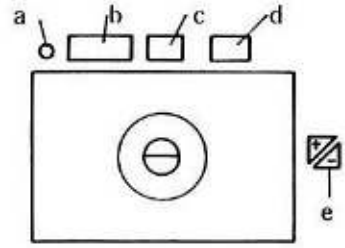

a: Ready-light LED

b: LCD panel; 7-segments, 4-digit

c: ADR aperture f-number in use

d: Shutter speed in set

e: Exposure compensation mark
LED lights up which exposure compensation in use

Film-advance lever: Single stroke; 165° full angle MD switch remains off in stand-off position. Release button is locked in rest position. Depressing of shutter button is prevented during film-advancing.

Exposure meter: Instant stop-down measurement for shutter controll except on M mode Meter incorporated with two SPDs for Automatic Multi-pattern Metering (AMP)

Exposure meterings for Nikkor and Nikon Series E lenses

○: operable X: inoperable

Mode	Type of lens	A M P	Centerweighted metering
P, S, A with stop-down switch off	AI-S, AI and series E	○	○
	Modified AI	×	○
	AI-S, AI and series E with teleconverter for AI-S type	○	○
	Modified AI with teleconverter for AI-S type	×	○
	AI-S, AI, modified AI and series E with teleconverter for AI type	×	○
M	All types	×	○
All modes with stop-down switch on	All types	×	○

Automatic Multi-Pattern Metering (AMP)

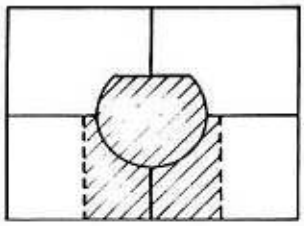

On P, S and A modes, AMP system divides the scene inside the frame into five segments and reads the brightness of each individual segment as shown in the figure.
In accordance with the data of these segments, correct exposure is calculated to give optimum exposure automatically.
Center of the frame surrounded by broken linses is divided into 4 segments vertically and horizontally.

Metering range: LV1 - LV20 at ASA/ISO 100 with F1.4 lens

Film speed range: ASA/ISO 12 - 4000

Exposure compensation: +2 - -2EV
+1 - -1EV at ASA/ISO 12 and 4000.
Exposure compensation mark inside the viewfinder lights up during in operation.

Out of metering range warning: P, S and A modes

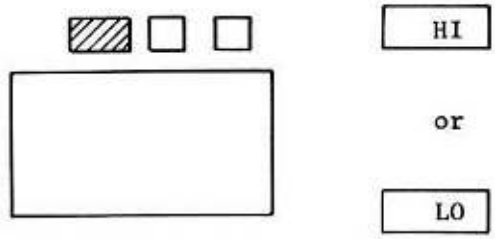

Over/under exposure warning: M mode

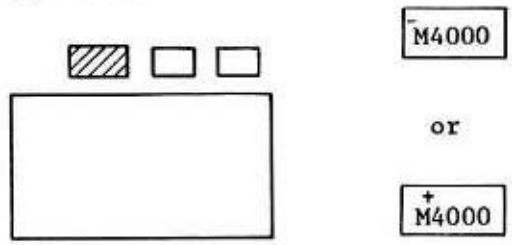

Warning if aperture is not set at minimum: P mode

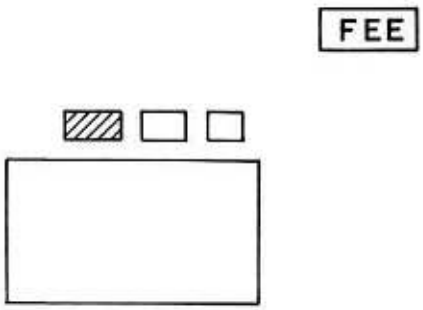

If the f/stop is not set at f/11 or larger f/number, FEE is indicated.
FEE is also indicated on S mode when correct exposure is not obtained at the aperture setting other than the minimum aperture.

Battery consumption: Metering: Approx. 9.4mA
Shutter releasing: Approx. 17mA
Exposure compensation LED lighting: Approx. 2mA

Accessory shoe: 4 contacts provided

1. Monitor contact
2. Sync contact
3. TTL flash auto-stop signal contact
4. Ready-light contact

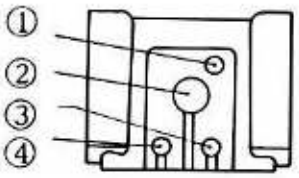

Flash synchronization: Sync with electronic flash unit at 1/250 sec. or lower.

On P, S and A modes (with the SB-15 or 16): flash sync automatically set to 1/250 sec.; LCD shows "250"

On M mode (with SB-15 or 16):

When shutter dial is set between 1/500 sec. and 1/4000 sec., flash sync automatically set to 1/250 sec. and LCD shows "M 250".
At 1 - 1/250 sec. settings, shutter speed is as set.
Ready-light lights up after flash output is charged on both P, S, A and M modes.

Self-timer: 8 - 14 sec. delayed exposure; mechanical type; cancellable after setting.

Frame counter: Additive type, self-resetting; until the frame counter reaches "1", shutter fires at 1/250 sec, LCD in the viewfinder displays "C 250" on P, S and A modes, and "MC 250" on M mode.

Multiple exposure: Possible via lever

Shutter release: At 1 - 1/4000 dial settings, depressing shutter release button halfway turns power switch on and further depressing turns magnetic release switch on and to release shutter.
At M 1/250 and B settings, shutter releases mechanically.

Power switch: Power switch is turned on when shutter release button is depressed halfway; it remains on for approx. 16 sec. after finger is lifted off the button.
By setting shutter dial to M 1/250 or B, power switch turns off.

Battery check: By confirming if power switch is on by depressing shutter release button halfway.

Battery voltage	Power switch
2.5V or more	Remains on for approx. 16 sec.
2.5V - 2.3V	Remains on momentaly
2.3V or less	Fails to turn LCD readout on Prohibits shutter release

Power source: Two 1.55V silver-oxide batteries, one 3V lithium battery or two alkaline-manganese batteries.

Battery power is supplied by the MD-15's power source when attaching the motor drive to the FA.

Flash synchronization on M250/B release: Ready-light lights up when the speedlight is charged; TTL flash output control unavailable.

Depth-of-field preview: Via lever provided; when lever actuated, P and S modes changed into full-aperture center-weighted metering on A mode; A and M modes changed into stop-down center-weighted metering

Shutter dial lock: Locked at M250 and B settings; released by depressing the button

Eyepiece shutter: Closed by turning eyepiece shutter lever clockwise

Motor drive coupling: MD-11, MD-12, MD-15; by tripod/motor drive coupling socket; film-advance coupling angle: 135°

Handgrip: Detachable; must be detached when attaching motor drive

Camera back: Hinged; safety lock provided

Data back contacts: Provided for the data back MF-16

Demensions: 142.5mm (W) x 92mm (H) x 64.5mm (D)

Weight: Approx. 625g (without lens)

ミラーアップ Mirror raise mechanism

※各図はチャージ状態を示している。

All figures show mech. of charged condition.

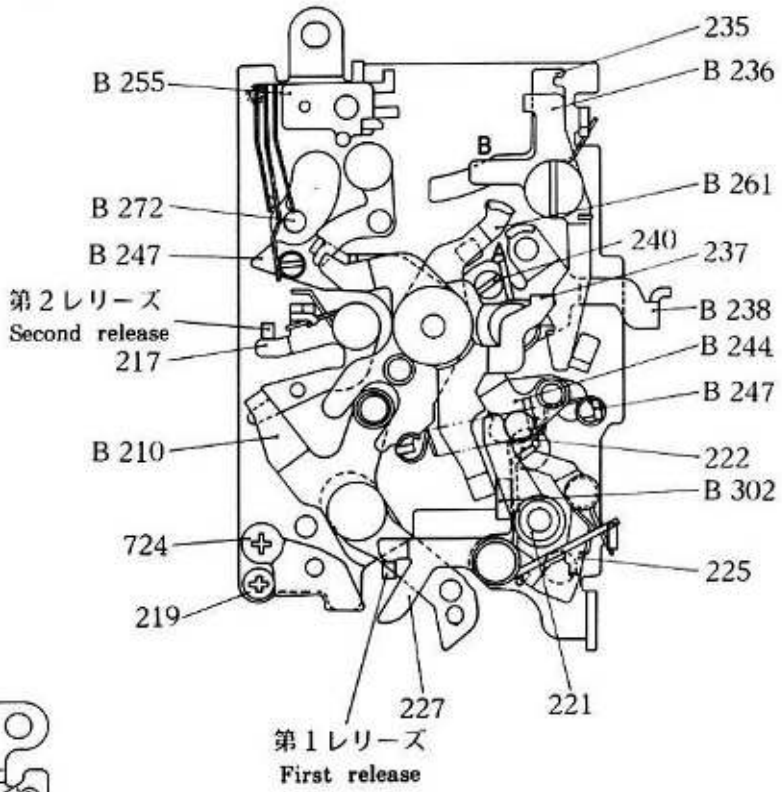

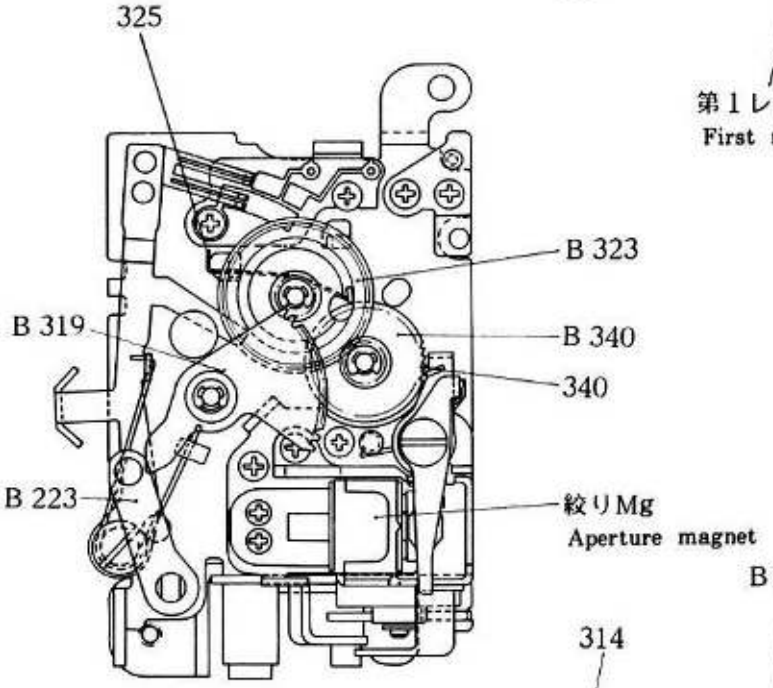

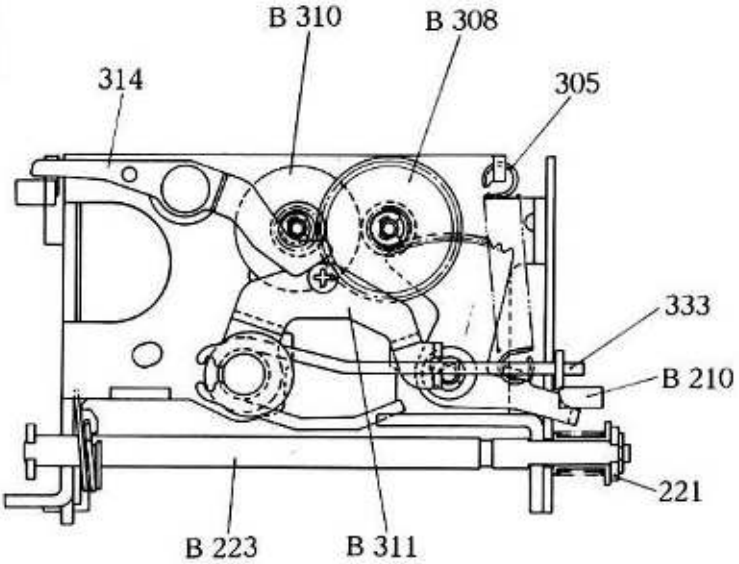

MIRROR RAISE MECHANISM

Broken-line enclosure indicates that the parts of mechanism are released in this sequence.

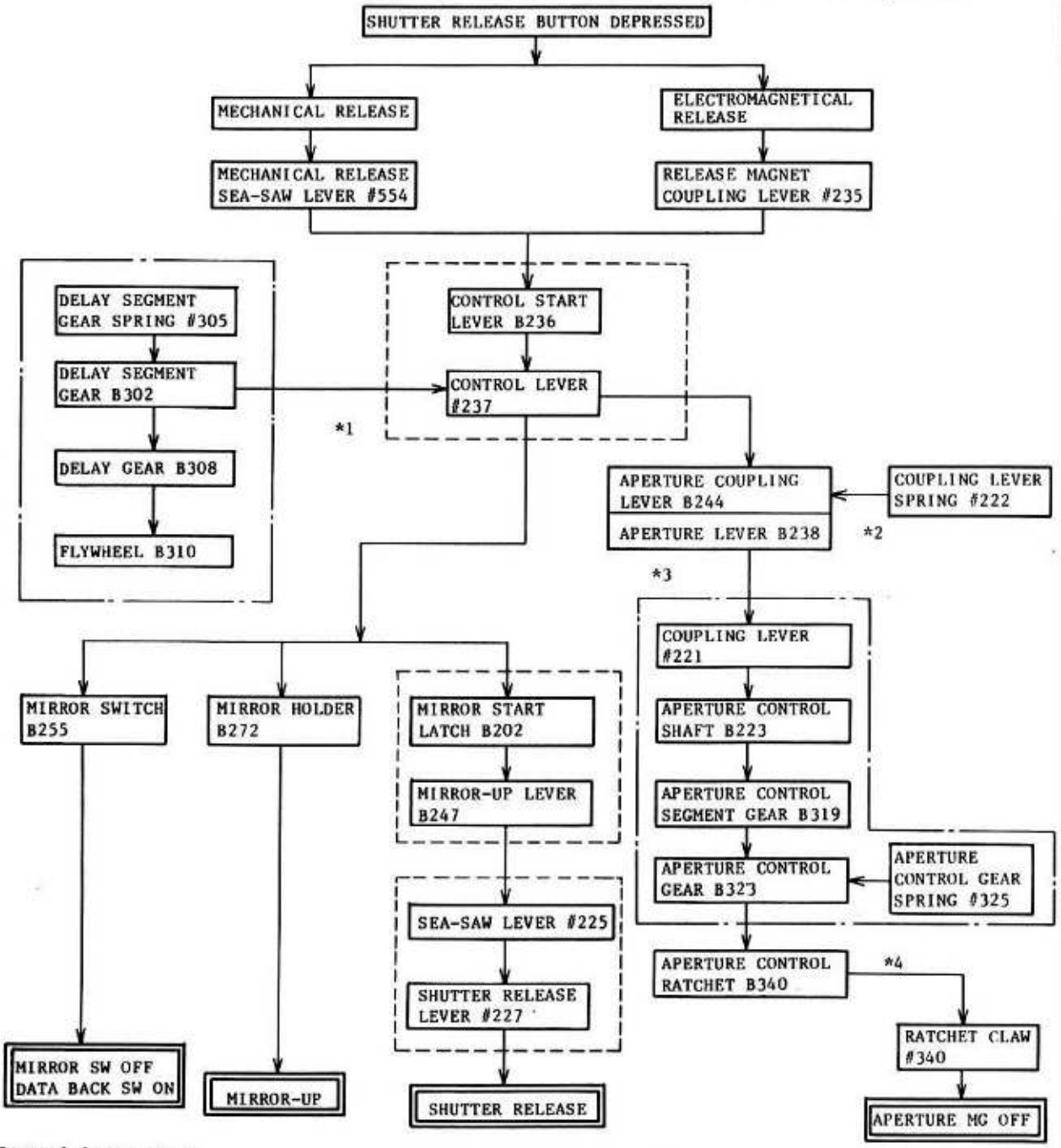

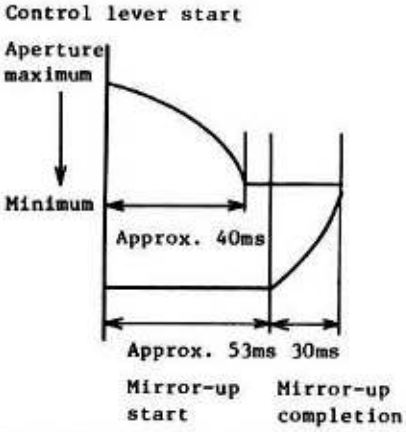

*1: Flywheel B310 and Delay gear B308 delay action of Mirror up lever B247 for approx. 53ms.

*2: Coupling lever spring #222 makes Aperture coupling lever B244 and Aperture lever B238 turn clockwise.

*3: Coupling lever spring #222 and Delay gear B308 controls the time for approx. 40ms that Aperture lever B238 stops down the aperture from the max. opening to the min. opening.

*4: On P and S modes, when Aperture magnet is turned off, the ratchet claw latches Ratchet #340 and Aperture coupling lever B244 to control Aperture lever B238.

ミラーダウン　Mirror down mechanism

※各図はミラーアップ状態を示している。

All figure show mech. of released condition.

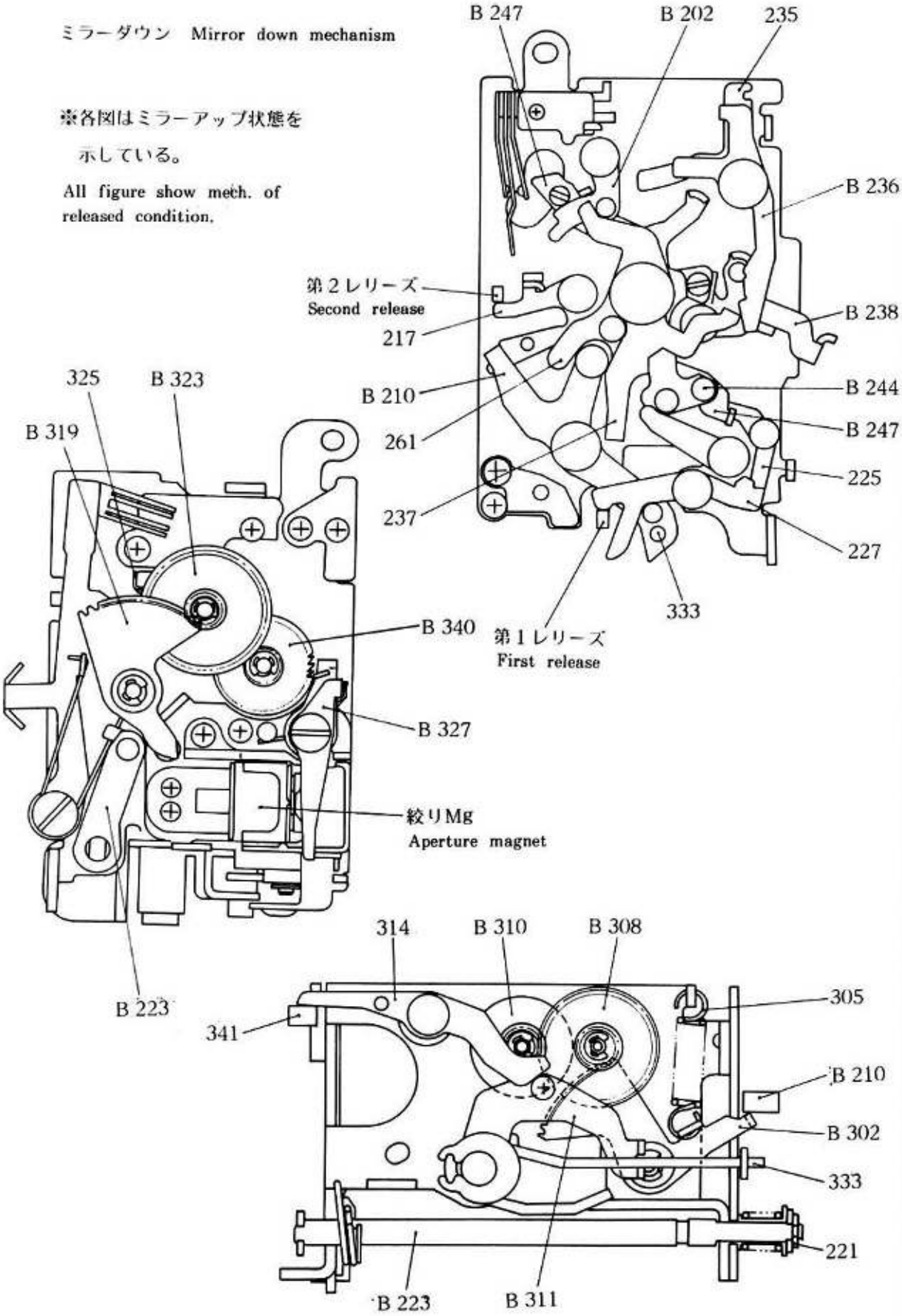

MIRROR DOWN MECHANISM

Broken-line enclosure indicates that the parts of mechanism are latched in this sequence.

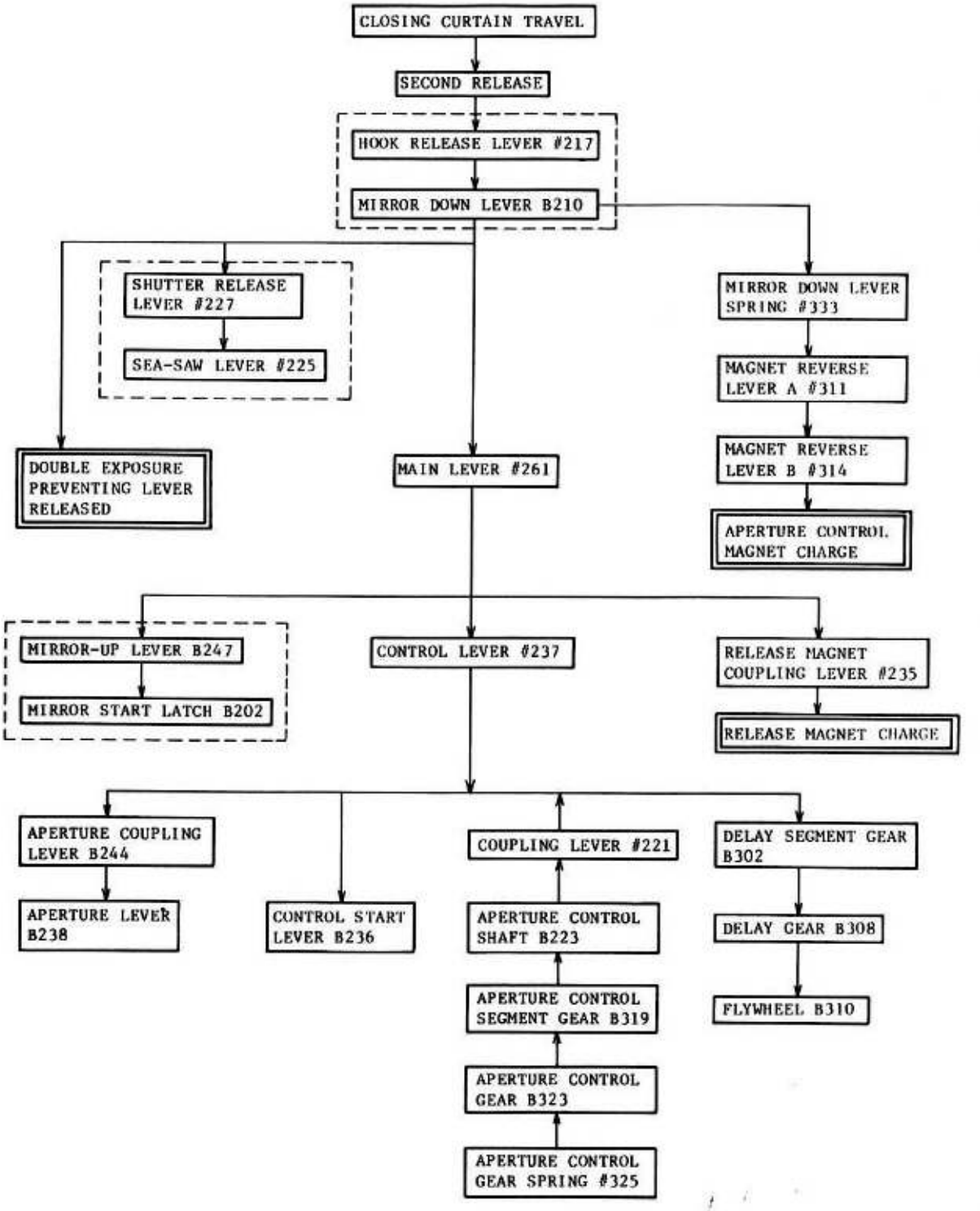

VIEWFINDER DISPLAY

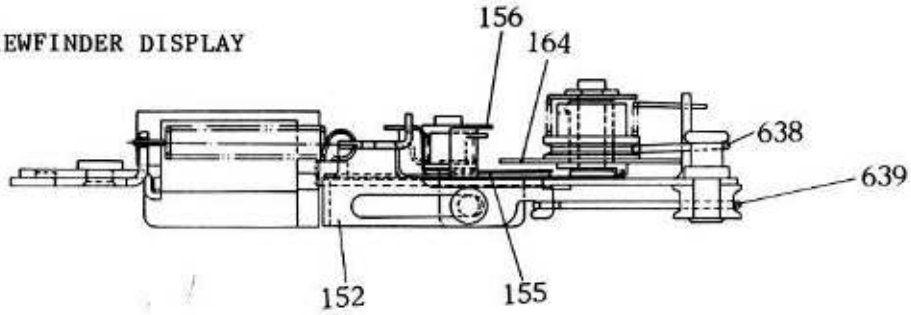

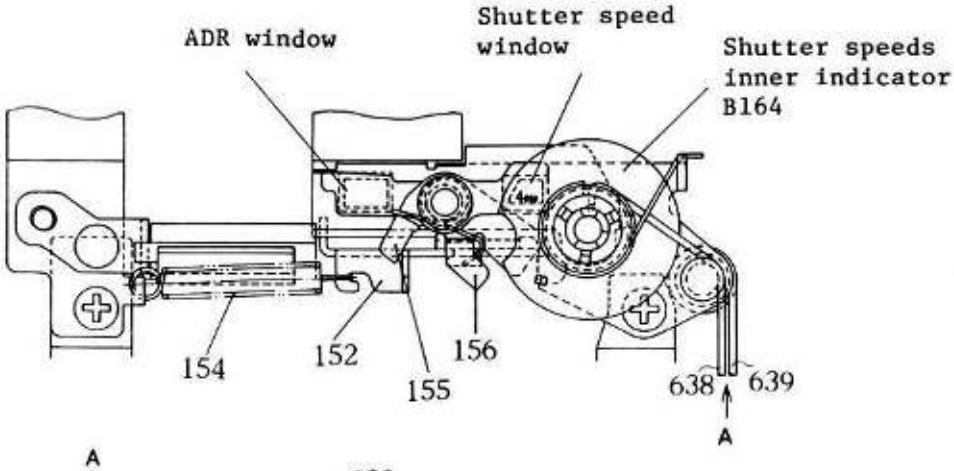

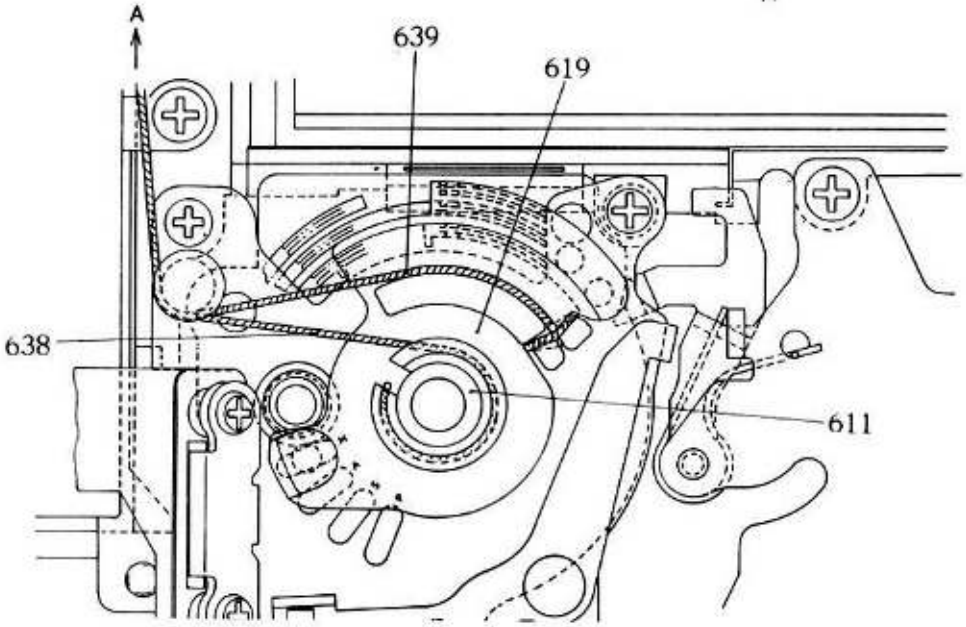

1) Shutter dial #611 → String #638 → Shutter speeds inner indicator B164

Turing shutter dial #611 makes shutter speeds inner indicator B164 rotate via String #638 to indicate the shutter speed in use.

2) Mode changeover cam #619 → String #638 → Mode changeover slider #152 → Mask plates #155, #156

By turning Mode changeover cam B619, the mask plates cover either ADR window or shutter speed window.

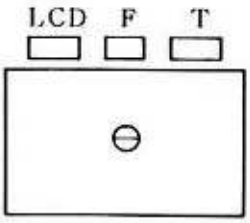

(ASA/ISO 100
EV15 1/500 F = 8)

Viewfinder display patterns changeable with the mode selection.

Mode	LCD	ADR	Shutter speed
P	500		
S	F8		500
A	500	8	
M	M500	8	

ASA/ISO 100, EV15

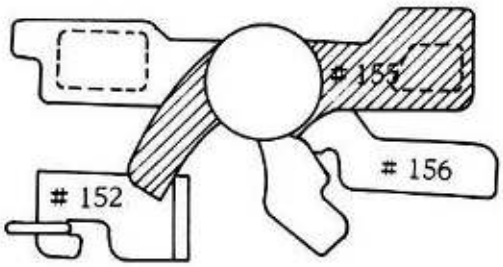

P mode

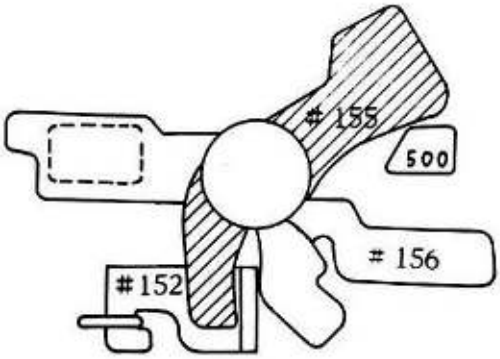

S mode

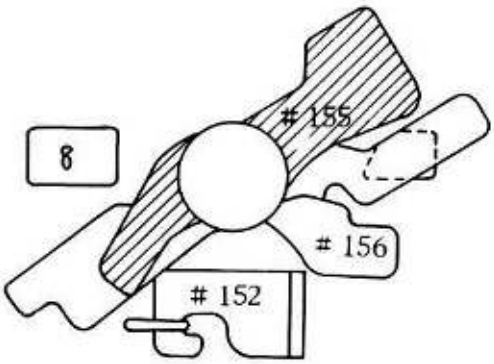

A mode

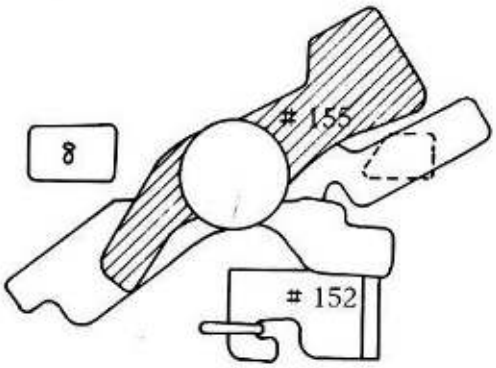

M mode

DISASSEMBLING & ASSEMBLING & ADJUSTMENTS & EXPLOSION DRAWINGS

Contents Page

[1] DISASSEMBLING

1. Disassembling outline D1
2. Disassembling procedure D2

[2] ASSEMBLING, ADJUSTMENTS AND EXPLOSION DRAWINGS

1. Film-advance Shaft, Sprocket (Figure 1) A1
2. Film-advance Mechanism Unit (Figure 2) A2
3. Film-advance Lever Unit (Figure 3) A3
4. Body, Shutter (Figure 4) A5
5. Bottom Cover (Figure 5) A7
6. Rewind Shaft (Figure 6) A9
7. Mirror Mechanism (Figure 7) A11
8. Mirror Mechanism (Figure 8) A13
9. Front Plate 1 (Figure 9) A15
10. Bayonet (Figure 10) A17
11. Front Plate 2 (Figure 11) A19
12. Front Plate 3 (Figure 12) A21
13. Pentagonal Prism (Figure 13) A25
14. FPC (Figure 14) A27
15. Top Cover (Figure 15) A34

15-1. Shutter Speed Accuracy Adjustments A35

15-2. Switches/Gray Code Checking A37

16. Camera Back Hinge (Figure 16) A39
17. Camera Back (Figure 17) A40

1. DISASSEMBLING OUTLINE

Note: 1) Numbers in parentheses refer to disassembling procedures.
2) Figure numbers refer to figures in reassembling procedures.

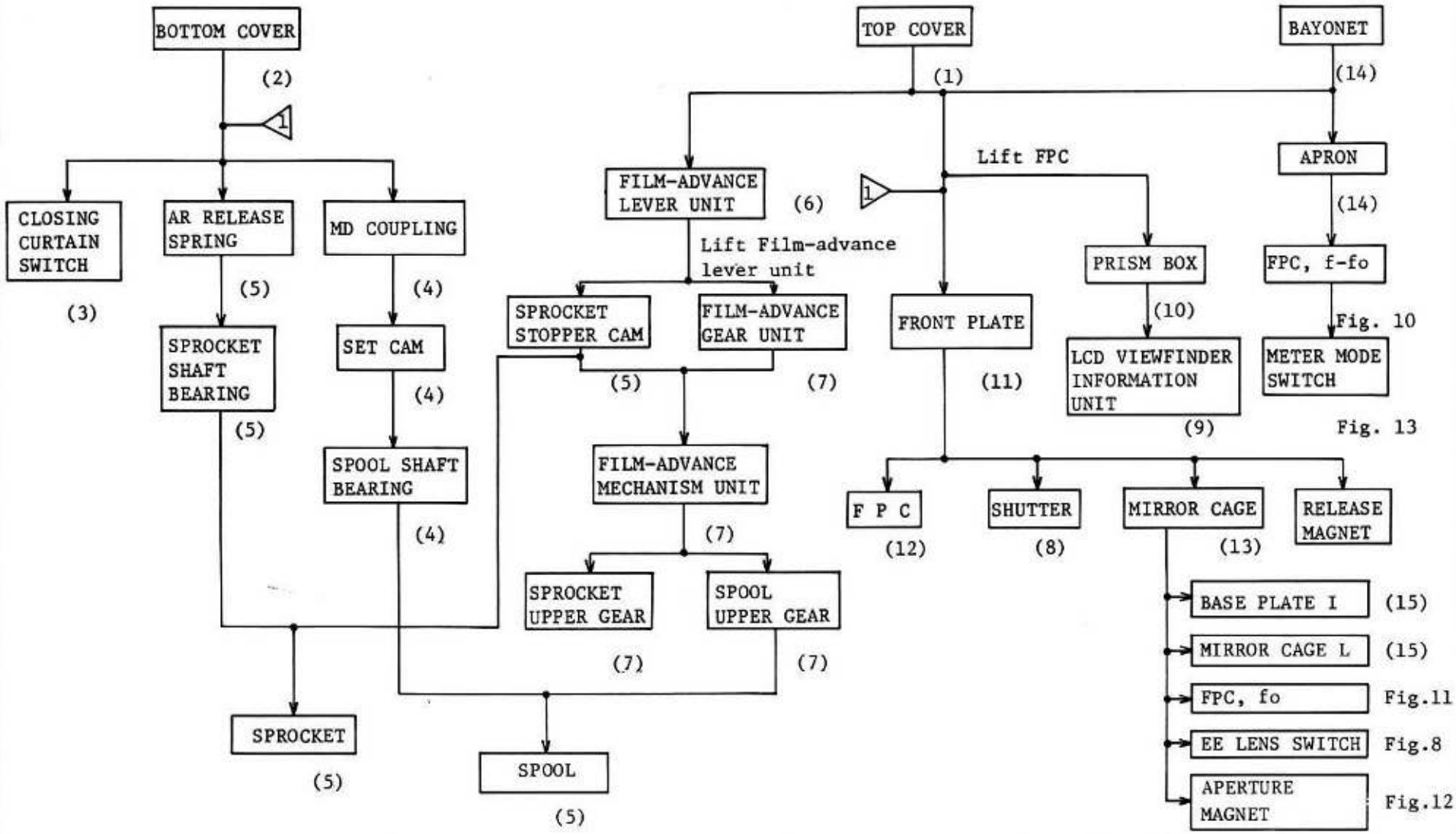

2. DISASSEMBLING PROCEDURE

Note: 1) Disassembling should be started after batteries are removed.

2) Figure numbers refer to figures in reassembling procedure.

3) Be sure to learn how the lead wires are arranged.

(1) Top cover

Fig. 3

Film-advance lever B401

Leatherette #403
Cover ring, film-advance lever #402

Tool: J11126

Fig. 12

Shutter dial #601

⊖ Screw #793x3

Shutter dial button #616

Fig. 6

Rewind knob #654

Rewind crank spring #656
Washer, rewind shaft #660
Friction spring #662
Rewind shaft tube #665

Fig. 6

O/C knob #686

Snap ring, O/C knob #659

Tool: J5272

Fig. 6

ASA dial unit B2661

Axle, O/C lock lever #689

Tool: J11089

Screw #703x2

Lever, rewind knob lock B688
Retainer, ASA index ring #687

TOP COVER B23 Fig. 15

Screw #754x2

Screw #753x3

(2) Bottom cover

Battery chamber lid B137 Fig. 5

↓

Bottom cover B24 Fig. 5

Screw #751x3

(3) Closing curtain switch

Unsolder lead wires from Closing curtain switch B549 Fig. 5

Lead wires
#1078 (blue), #1070 (blue)
#1079 (brown), #1071 (brown)

↓

Closing curtain switch B549 Fig. 5

Screw #743

(4) Spool

(5) Sprocket

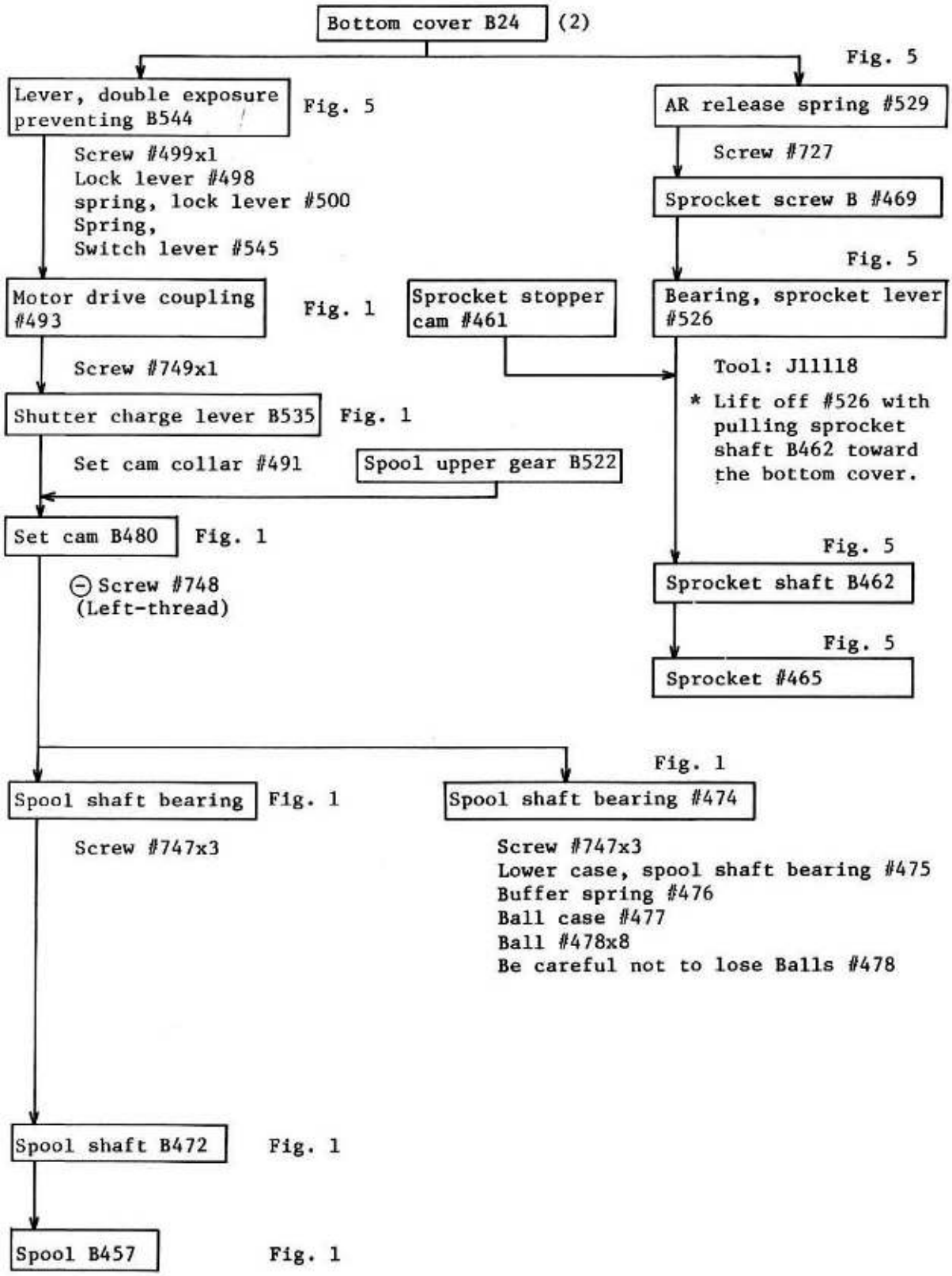

(6) Film-advance lever unit

(7) Film-advance mechanism unit

Top cover B23 (1)

Unit, front plate B2026 (11)

Shutter B100 (8)

Unsolder lead wires from Film-advance lever unit FPC B1005 Fig.3

Lead wires #1077 (gray)
#1079 (brown)
#1081 (green)

Release plate A B556 Fig.4

⊖ Screw #564
⊖ Screw #563
Spring B, release plate #561

Spring hook, release plate #588 Fig.4

⊖ Screw #563

Unit, film-advance lever B2416 Fig.3

Screw #704x2
Screw #727

Fig.3

Unit, film-advance lever B2416

Screw #704x2
Screw #727
Keep FPC attached

Fig.2

Film-advance gear #748

⊖ Screw #748
(Left-thread)
Spring clutch cam #452
Clutch cam #451
Film-advance cam #453
Washer #774

Fig.1

Sprocket stopper cam #461

Screw #460
⊖ Screw #461
Tool: J11155

Unit, film-advance mechanism Fig.2

Screw #769x3
Lift the shutter dial up to unscrew one of Screws #769

Fig.1

Spool upper gear B522

Fig.1

Sprocket upper gear #463

(8) Shutter

Top cover B23 (1)

Unit, front plate (11)

Shutter B100

Screw #759x2
Screw #758

(9) Unit, LCD viewfinder information

Pentagonal prism L2 (10)

Screw #701x3 Fig.12

Screw, LCD plate #728x2 Fig.14

Washer #781x2

Unit, LCD viewfinder information B2151

Screw #728x2
Spacer, LCD plate #132
Be careful not to damage the film and string of inner indicator.

(10) Pentagonal prism

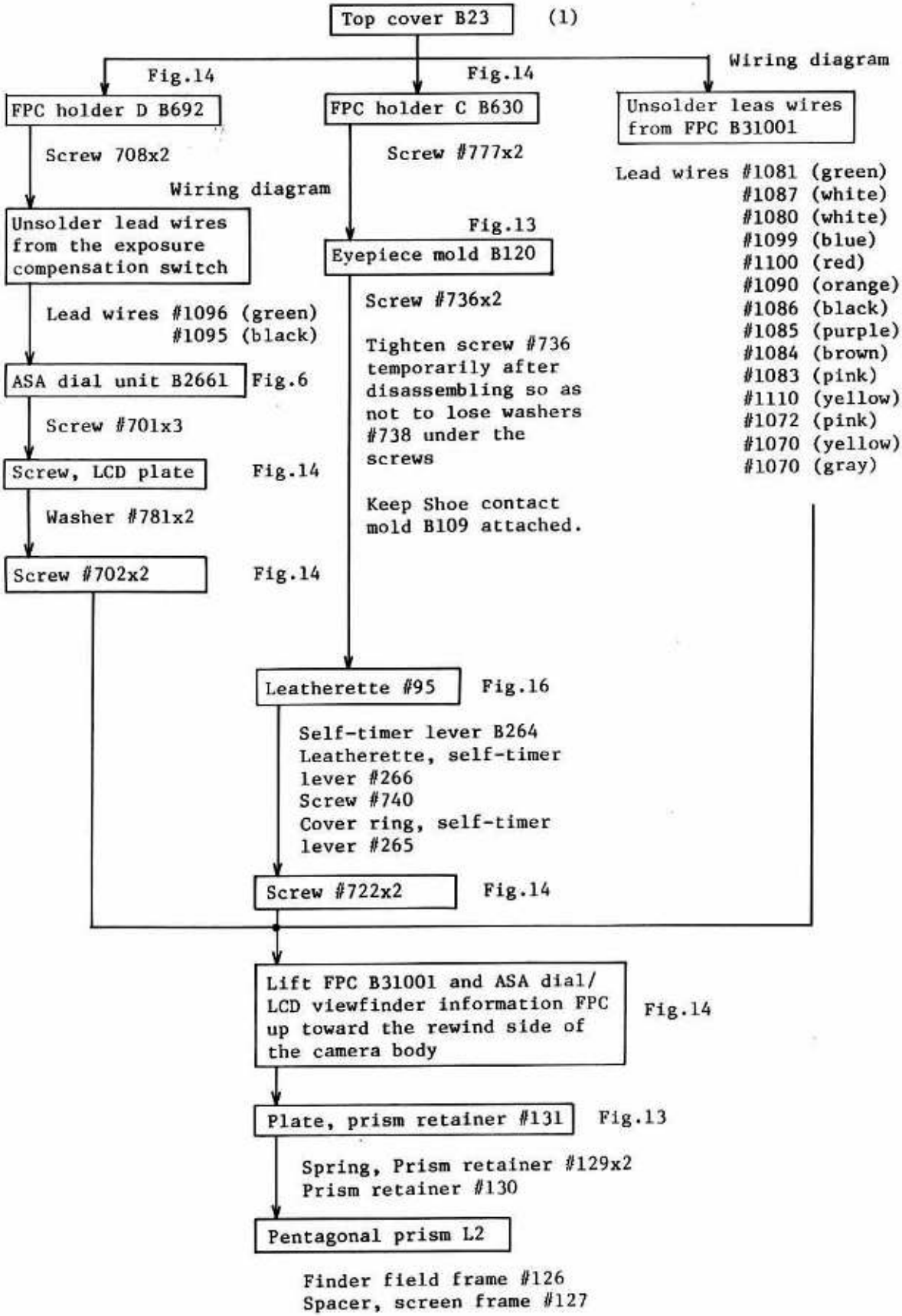

(11) Unit, front plate

FPC holder D B691 — Fig.14

Screw #708x2

Unsolder leas wires from the exposure compensation switch — Fig.6

Lead wires #1096 (green)
#1095 (black)

ASA dial unit B2661 — Fig.6

Screw #701x3
One of screws #701 locates under the exposure compensation dial lock spring

Screw, ASA dial/LCD viewfinder information FPC B1002 — Fig.14

Screw #702x2

FPC holder C B630 — Fig.14

Acceptor, FPC holder C B628
Screw #777x2

Screw, Shutter dial — Fig.12

Unscrew one of screws #701 located at the eyepiece side

Unsolder lead wires from FPC B31001 — Wiring diagram

Leadwires #1080 (white)
#1081 (green)
#1072 (pink)
#1112 (white)

Unsolder lead wires from Shoe contact mold B109 — Wiring doagram

Lead wires #1105 (orange)
#1082 (orange)
#1106 (black)

1

1

Screws, MD base plate — Fig.14

Screw #704x2

Unsolder lead wires from the MD base plate — Wiring diagram

Peel off Tape #46
Lead wires
#1077 (gray), #1076 (yellow),
#1075 (black), #1074 (red),
#1073 (blue), #1072 (pink),
#1071 (brown)

Self-timer lever B264 — Fig.13

Leatherette, self-timer lever #266
Cover ring, self-timer lever #265
Screw #740

Leatherettes A #95 and B #96 — Fig.16

Cover, variable resistors B27 — Fig.13

Screw #701x3
Retainer, printed circuit #28

Unscrew screws from Front plate unit B2026 — Fig.13

Screw #755x5
Screw #743
Screw #756x2

Remove Front plate unit B2026

Peel off the tape under the shutter dial.
Separate shutter control FPC #99 from the cutout of shutter dial when removing.

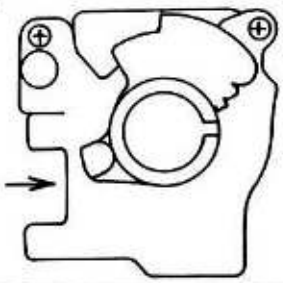

(12) F P C

Mount a tool lens to facilitate holding of camera disassembled.
Be careful not to damage the MD contact.

Unit, front plate B2026 (11)

↓

Unsolder lead wires from FPC B31001 — Wiring diagram

Lead wires
#1110 (yellow), #1083 (pink)
#1070 (gray) and (yellow)
#1087 (white), (red) and (blue)
#1086 (black), #1085 (purple)
#1084 (brown), #1099 (blue)
#1100 (red), #1098 (gray)
#1097 (purple), #1090 (orange)
#1091 (green), #1093 (pink)
#1094 (yellow),
#1103 (green), #1104 (brown)
#1108 (white), #1107 (white)

↓

Unsolder leas wires from Shoe contact mold B109 — Wiring diagram

Lead wire #1092 (green)
#1115 (black)
#1106 (black)

↓

Shoe contact mold B109 — Fig.13

Screw #765

↓

1

1

Unsolder SPDs of Eyepiece mold B120

Remove antimoisture coating of silicon.

↓

Snap ring #729 — Fig.14

Washer #781x2

↓

FPC holder B B364 — Fig.14

Screw #710x2

↓

FPC, ASA dial/LCD viewfinder information — Fig.14

Peel off the tape on the memory condenser

↓

FPC holder A B362 — Fig.14

Screw #711x2

↓

Screws, FPC B31001 — Fig.14

Screw #779x2

↓

Screws, resistor block — Fig.14

Screw #722x2

↓

Remove FPC B31001

Be careful not to break the FPC when removing.

(13) Mirror box

Unit, front plate B2026 (11)

↓

Unsolder lead wire from the MD base plate — Fig.14

Lead wire #1107 (white)
Peel off the tape

↓

Unsolder lead wires from lower side of the front plate unit — Wiring diagram

Lead wires
#1070 (yellow) and (gray)
Peel off the three tapes

↓

Unsolder lead wires from the rewind side of the camera — Wiring diagram

Lead wires
#1101 (green), #1102 (orange)
#1108 (white)

↓

Unsolder lead wires from upper side of FPC B31001 — Wiring diagram

Lead wires
#1099 (blue), #1100 (red)
#1103 (green), #1104 (brown)
#1085 (purple), #1086 (black)

↓

FPC holder B364 — Fig.14

Screw #710x2

↓

Remove FPC holders from FPC B31001 and fo FPC B1003 — Fig.14

↓ 1

1 ↓

Unscrew Screw #779x2 from FPC B31001 — Fig.14

↓

Spring hook, fo lever #392 — Fig.11

Screw #722x1

↓

LED holder B681 — Fig.12

Screw #701
Keep two lead wires of the LED holder soldered FPC B31001

↓

FPC retainer — Fig.12

Peel off the tape and
put aside four lead wires

↓

Wire, release magnet #263 — Fig.12

↓

Screws, mirror mechanism unit

Screws
#713, #286
#358 and #260
Lift FPC B31001 up to unscrew these screws.
Be careful not to bend Mirror light baffle plate #283.

(14) Bayonet

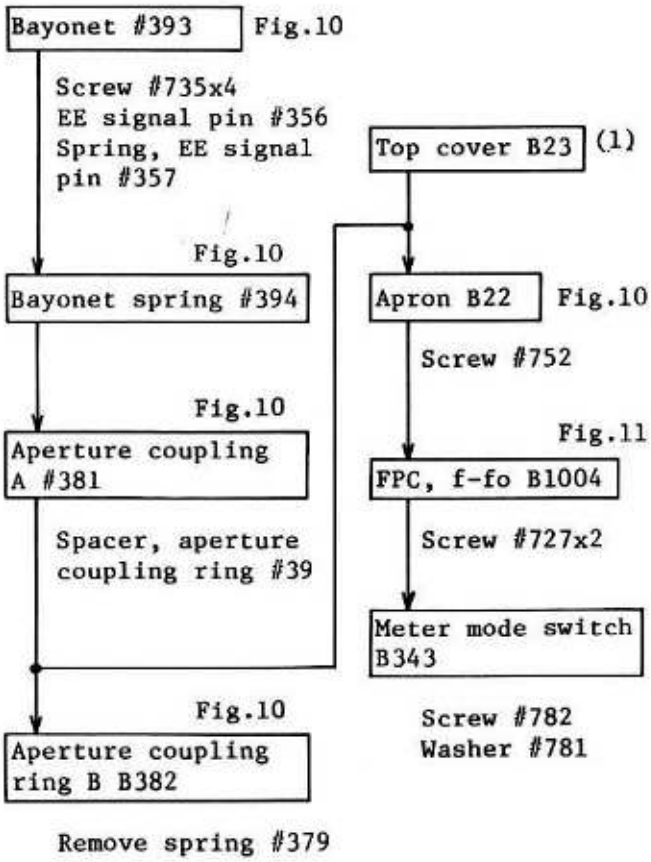

(15) Base plate I, Mirror cage L

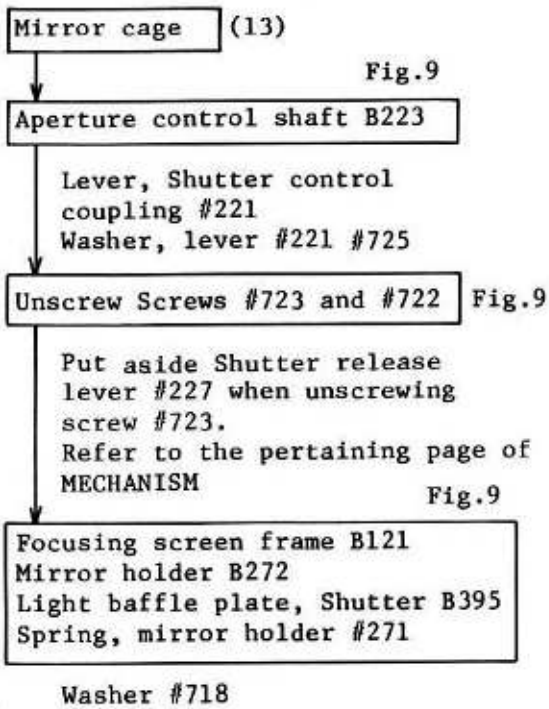

1. 巻上軸 スプロケット軸部 FILM-ADVANCE SHAFT, SPROCKET

外周

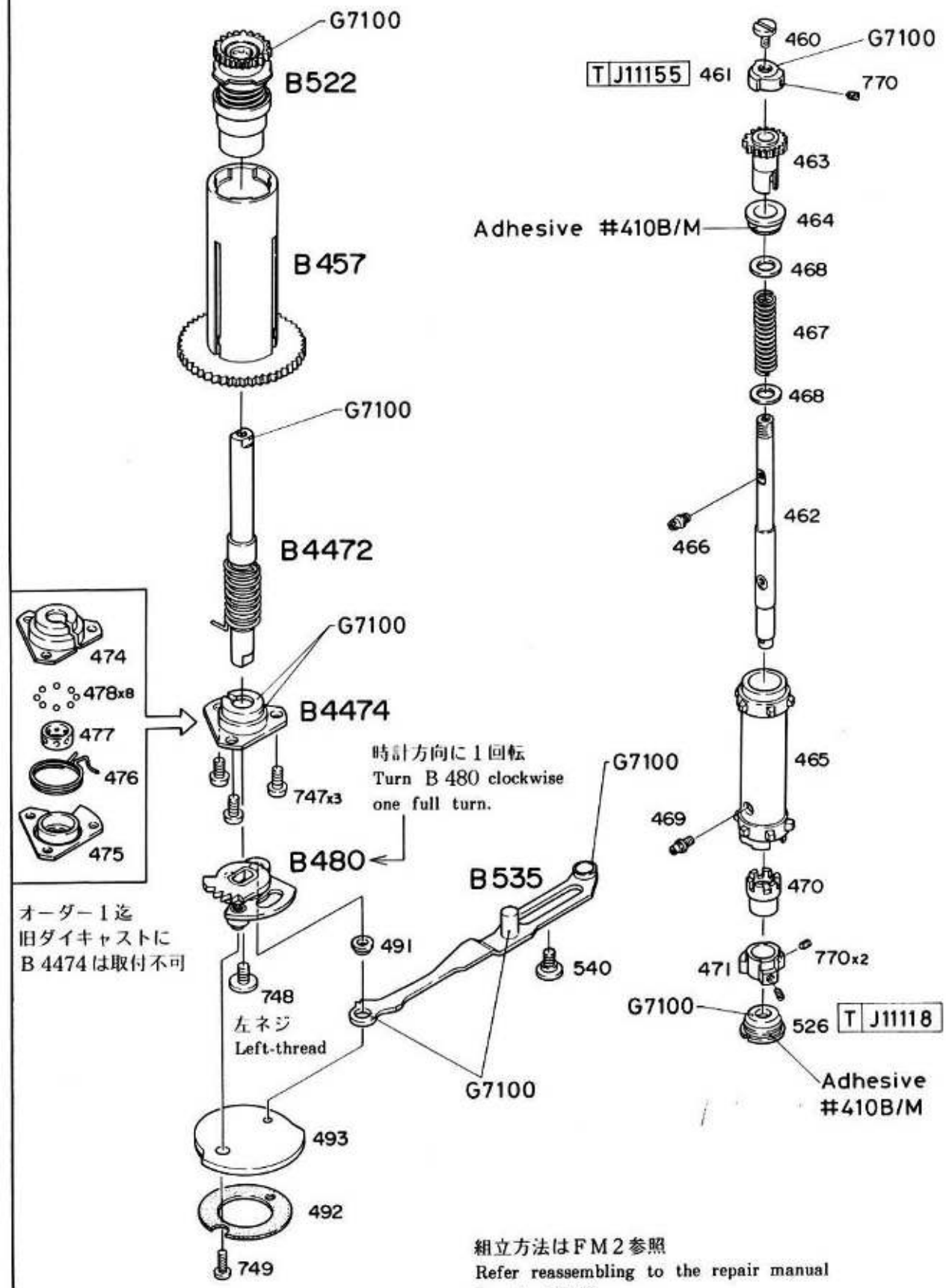

組立方法はFM2参照
Refer reassembling to the repair manual for the FM2

Fig. 1

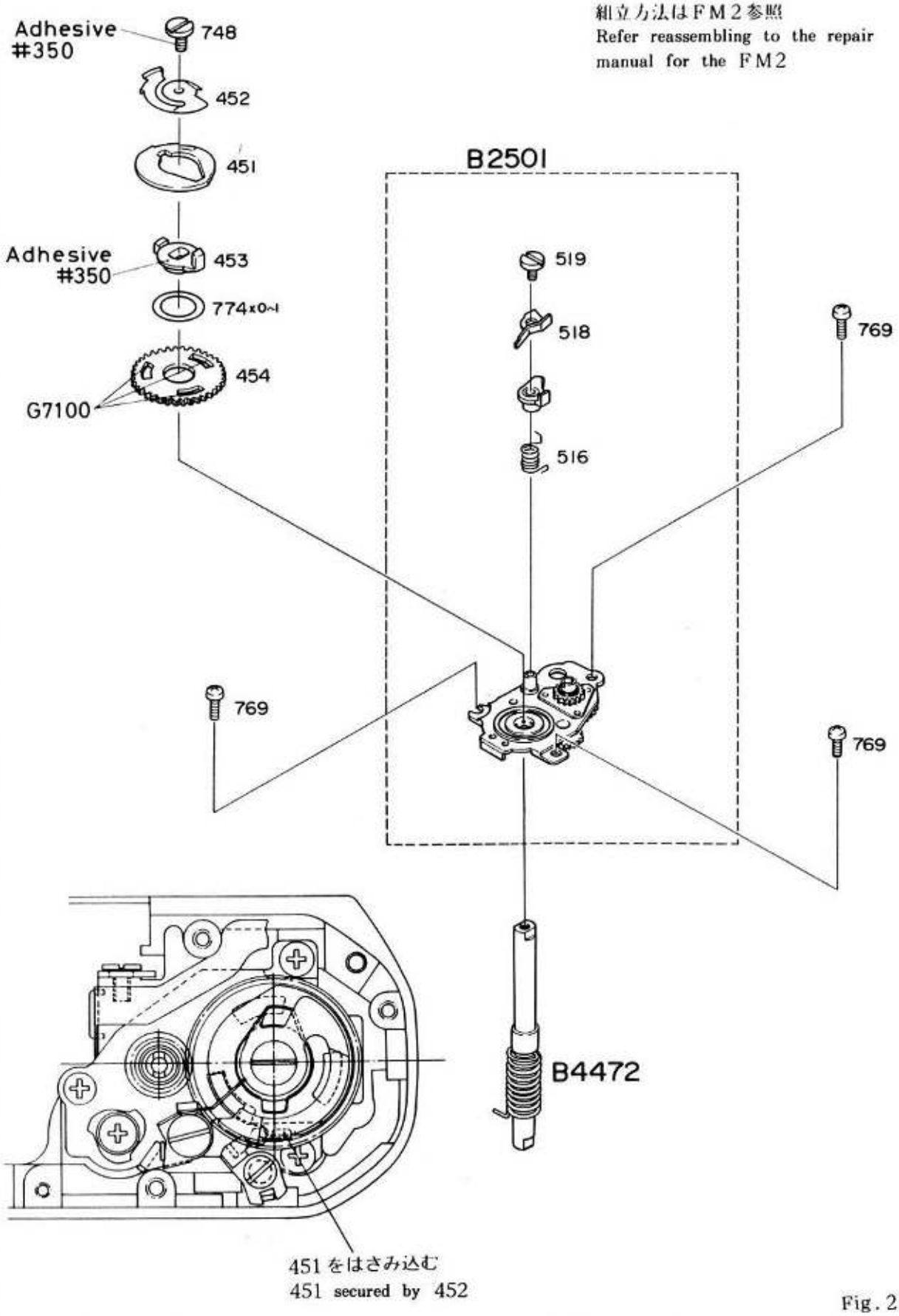
組立方法はFM2参照
Refer reassembling to the repair manual for the FM2
Adhesive #350
748
452
451
B2501
Adhesive #350
453
519
774x0~1
518
769
454
G7100
516
769
769
B4472
451をはさみ込む
451 secured by 452

Fig. 2

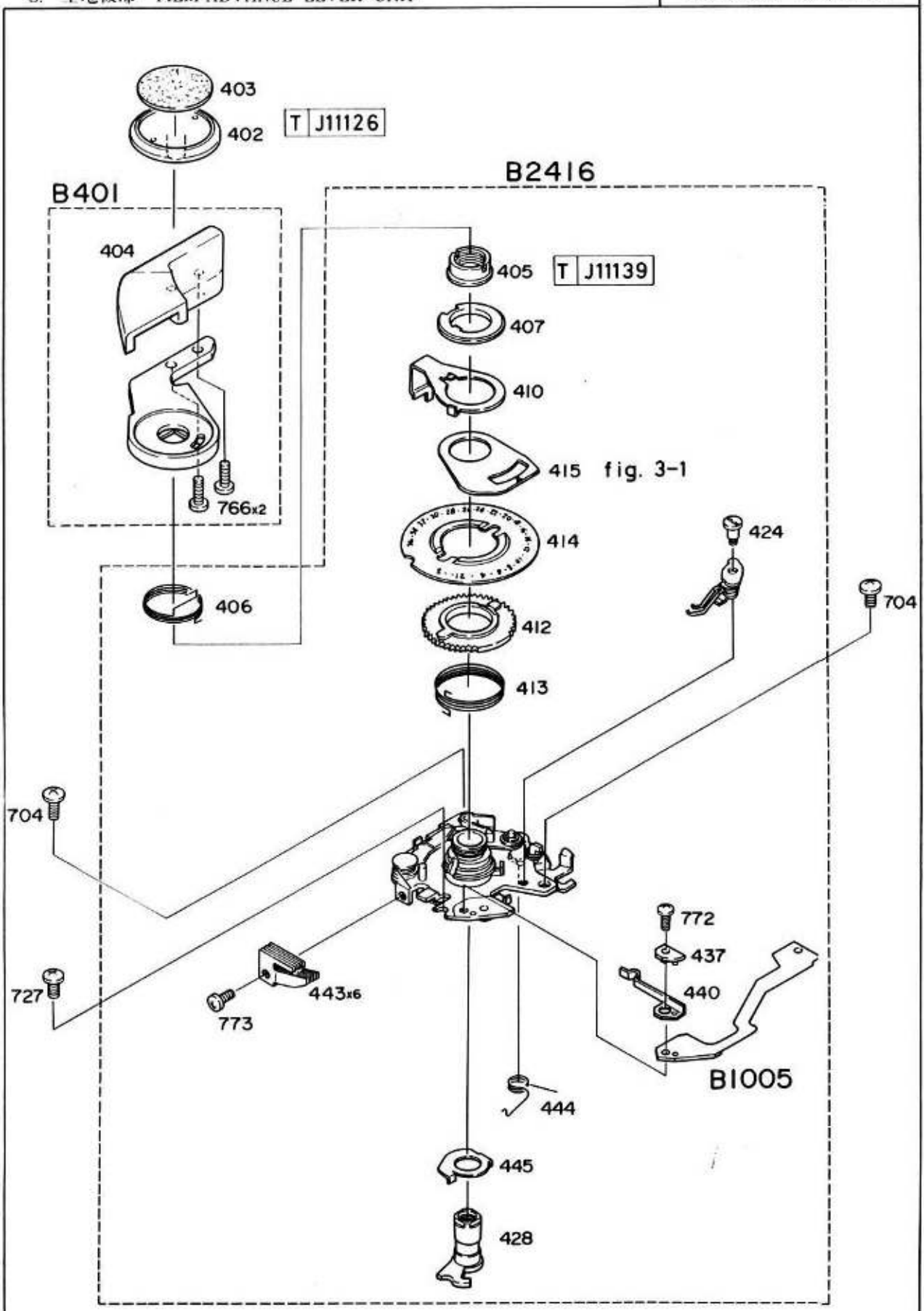
403
402
T J11126
B401
B2416
404
405
T J11139
407
410
415
fig. 3-1
766x2
414
424
406
704
412
413
704
772
437
727
443x6
440
773
B1005
444
445
428

Fig. 3

Fig. 3-1 FRAME-COUNTER INDEX #415 POSITION

To be aligned 1/2 or more of one full calibration mark of counter scale.

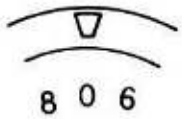

3-1 FILM-ADVANCE LEVER UNIT INSTALLATION

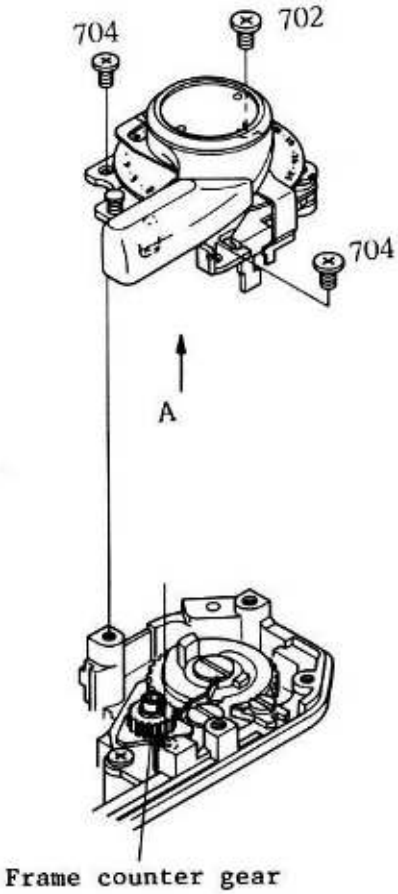

Film-advance lever unit: bottom view

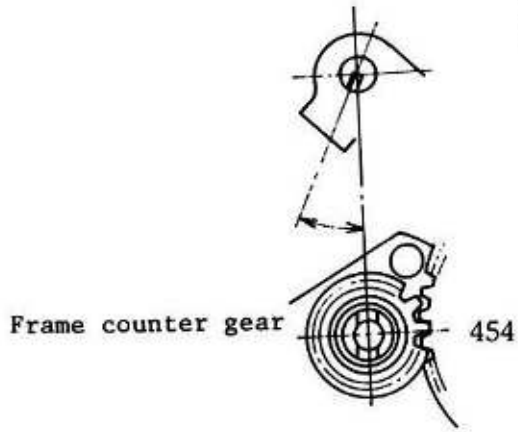

Place Film-advance lever unit toward left-upper side after installation.

3-2 FILM-ADVANCE LEVER UNIT FPC B1005 SOLDERING

Route Film-advance lever unit FPC B1005 under the film-advance lever unit and secure it with Release plate spring hook #588. (Refer to Figure 4)

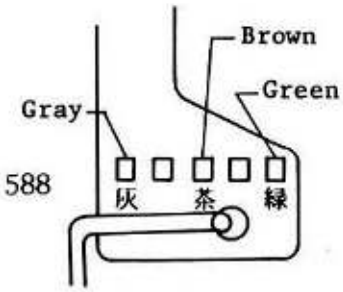

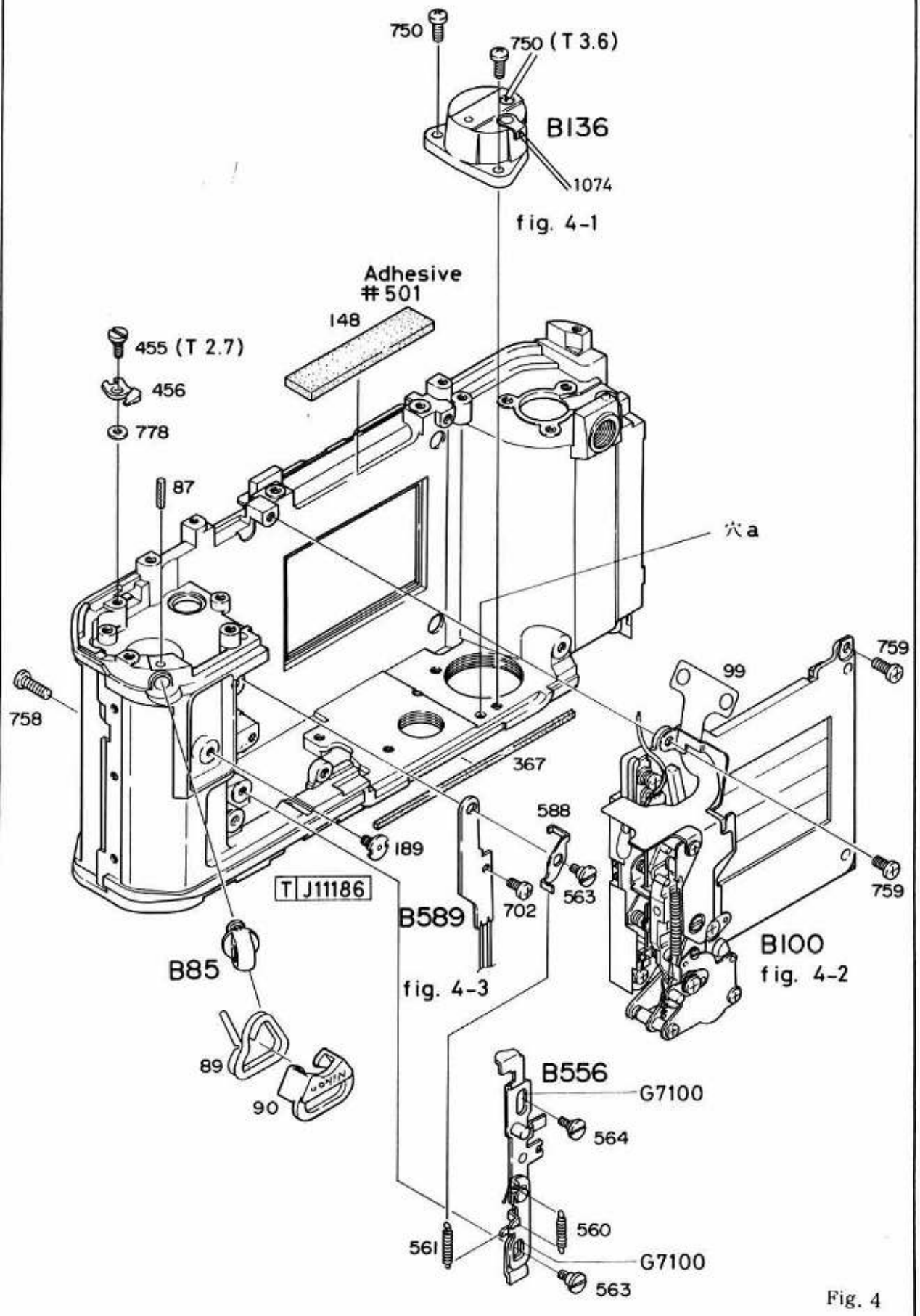
750
750 (T 3.6)
B136
1074
fig. 4-1
Adhesive
#501
148
455 (T 2.7)
456
778
87
穴a
759
99
758
367
588
189
563
759
T J11186
702
B589
fig. 4-3
B100
fig. 4-2
B85
89
90
B556
G7100
564
560
561
G7100
563

Fig. 4

Fig. 4-1 Route Lead wire #1074 from Battery chamber B136 through opening A of the body die-casting.

Fig. 4-2 When installing the shutter unit, pick the right-side plate and place it downward.

Fig. 4-3 RELEASE SWITCH BASE PLATE B589 POSITIONING

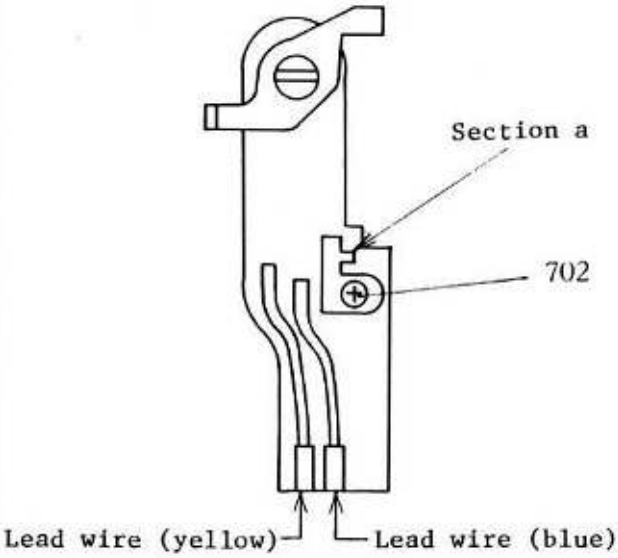

Loosen Screw #702 and position Release switch base plate B589 so that the brush of Release plate A B556 gets in contact with section a as shown in the figure.
Be sure to re-tighten #702 after adjustment.

4-1 ROUTE OF LEAD WIRES TO FILM-ADVANCE LEVER UNIT AND RELEASE SWITCH BASE PLATE

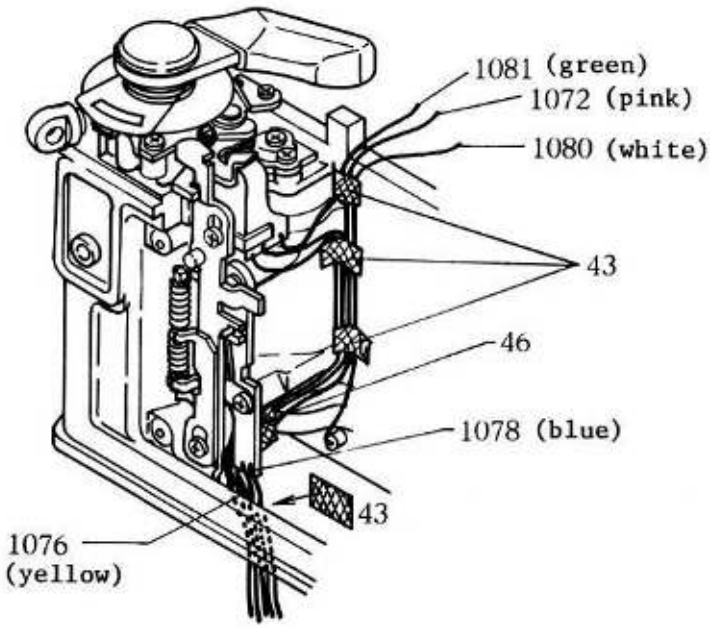

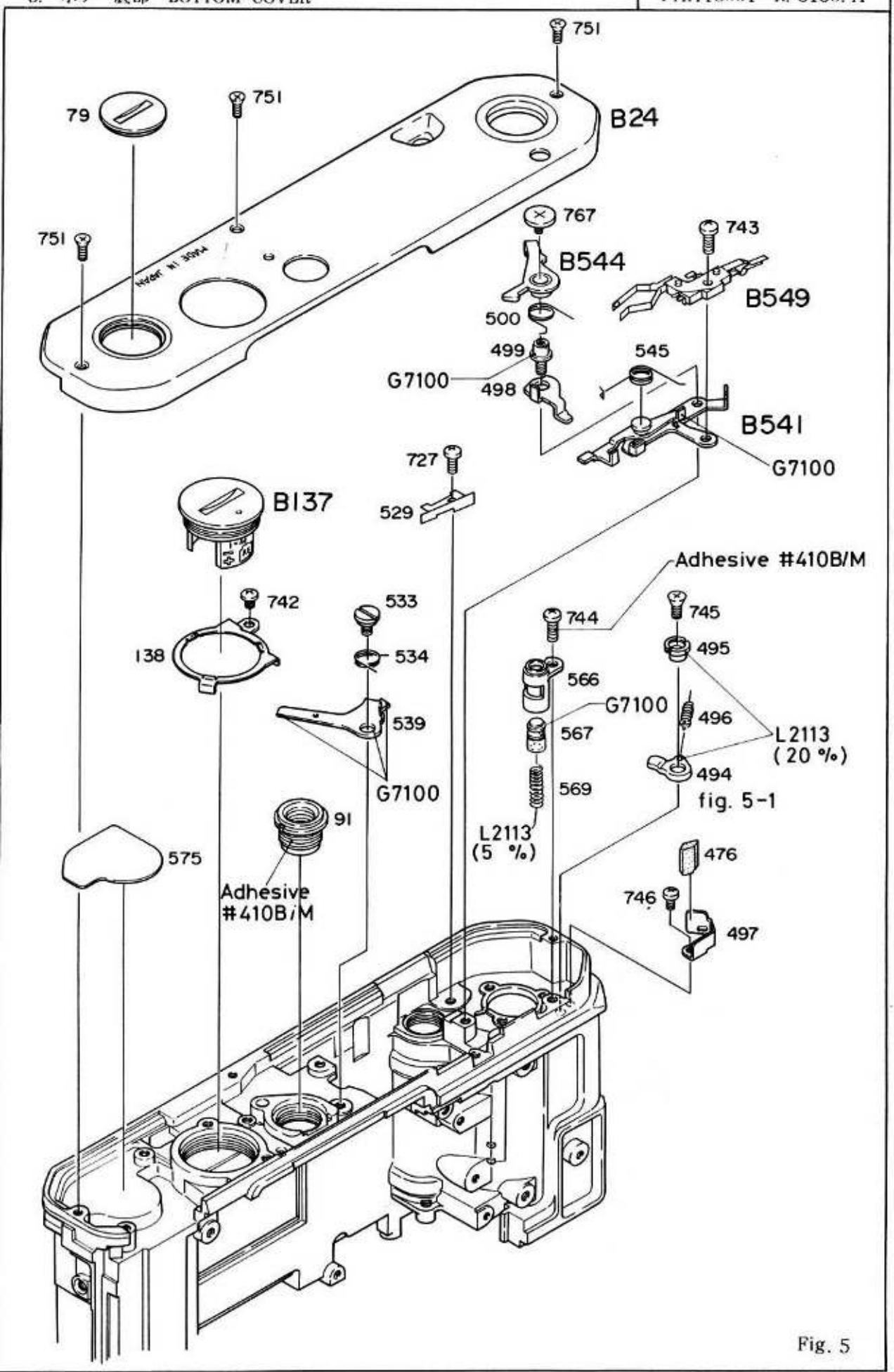
751
79
751
B24
751
767
743
B544
B549
500
499
545
G7100
498
B541
G7100
727
B137
529
Adhesive #410B/M
742
533
744
745
138
534
495
566
G7100
496
539
567
L2113
(20 %)
494
G7100
569
fig. 5-1
91
L2113
(5 %)
575
476
Adhesive
#410B/M
746
497

Fig. 5

Fig. 5-1 PENDULUM #494 ADJUSTMENT

Set cam B480 should move 0.2 - 0.6mm after being disengaged from Pendulum #494.

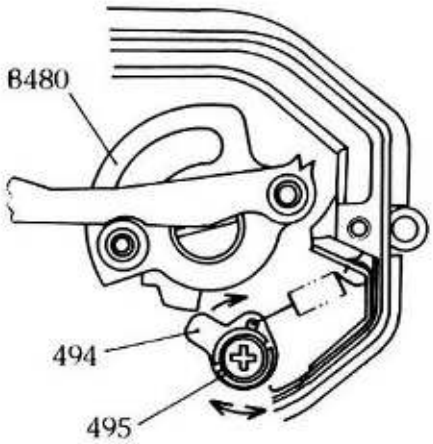

5-1 LEAD WIRES ROUTE/SPRING HOOK

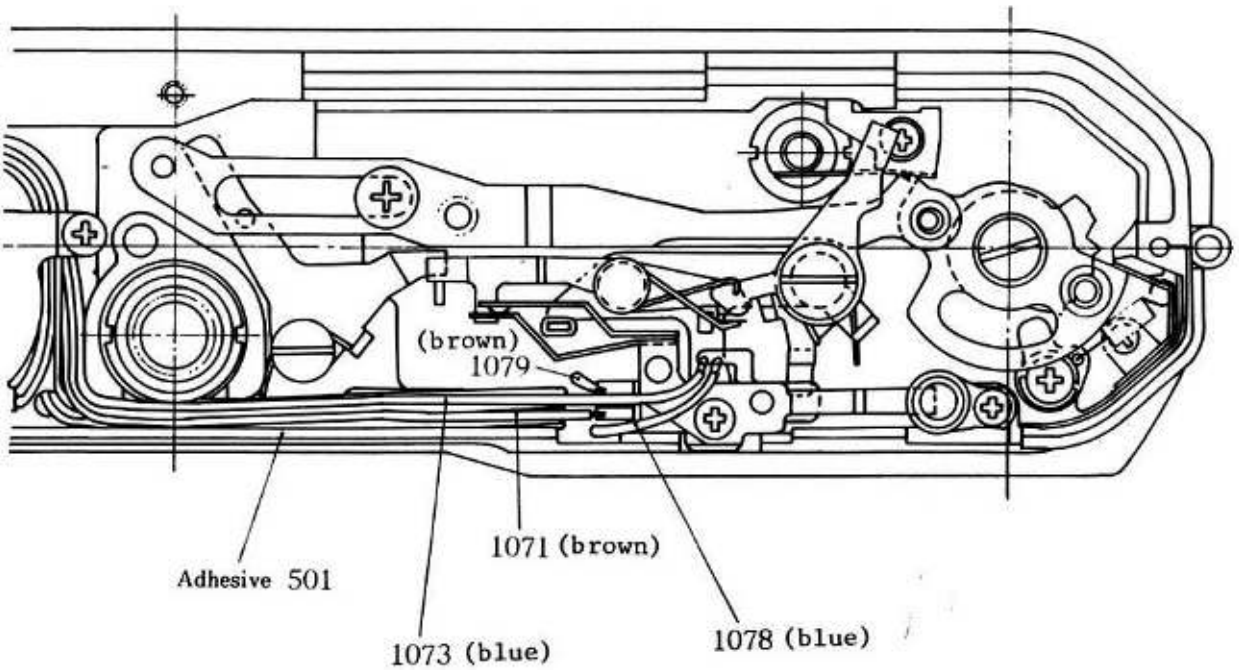

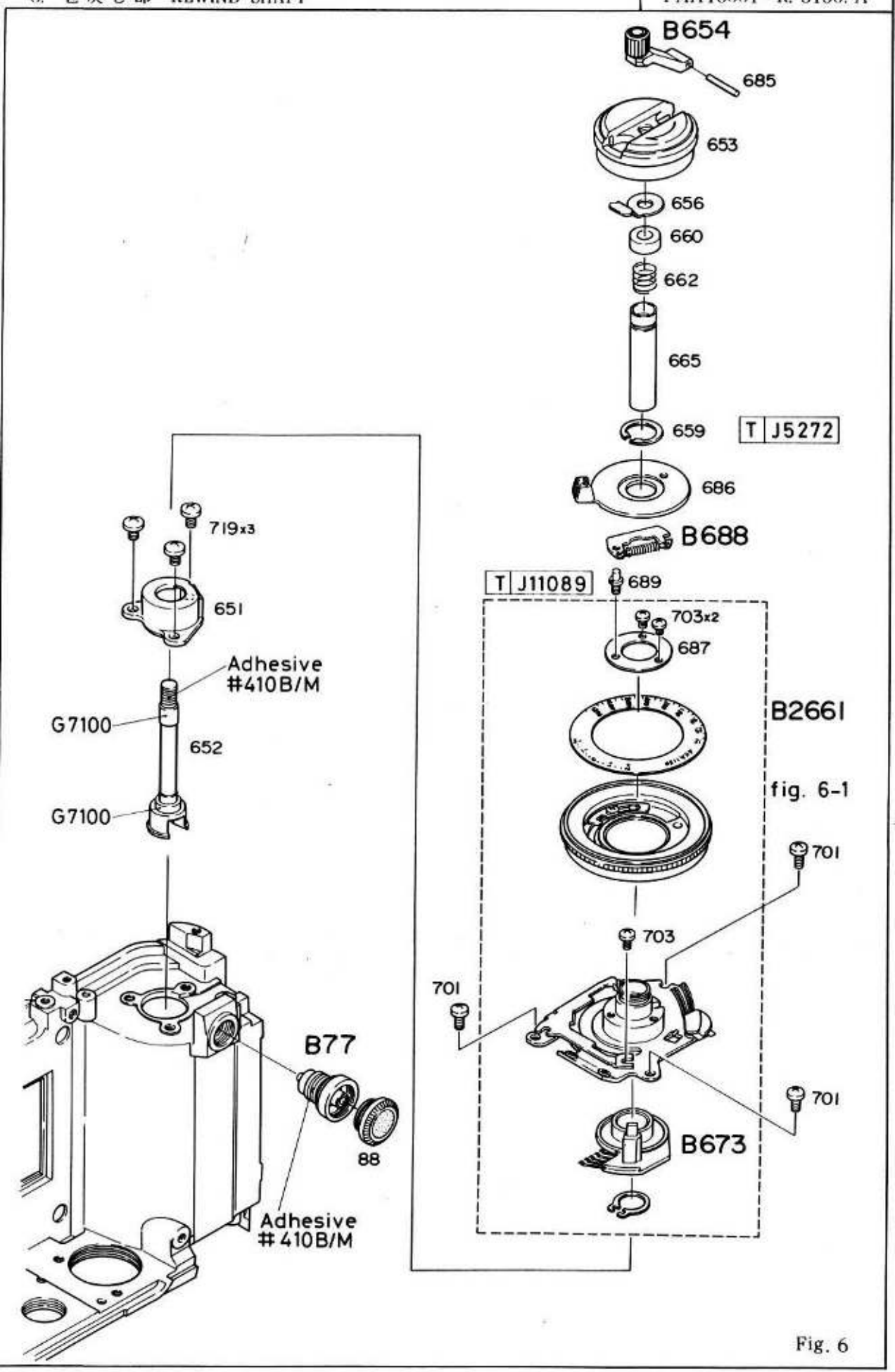
B654
685
653
656
660
662
665
659
T J5272
686
B688
T J11089
689
703x2
687
B2661
fig. 6-1
701
703
701
701
B673
719x3
651
Adhesive
#410B/M
G7100
652
G7100
B77
88
Adhesive
#410B/M

Fig. 6

Fig. 6-1 ASA BASE PLATE BRUSH B673 POSITIONING

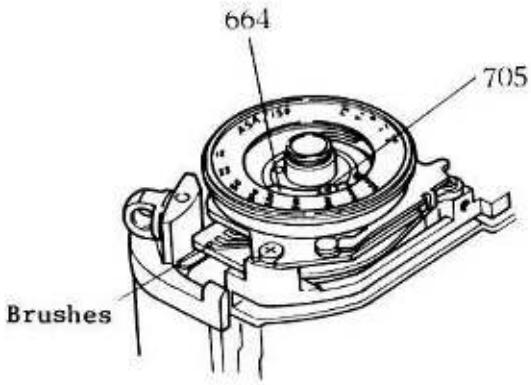

Positioning should be made at the following two settings.

	ASA dial	Exposure compensation dial
1.	12	+1
2.	400 + 2/3	0

Loosen Screw #705 to position ASA dial coupling plate #664 so that ASA brushes can contact the patterns on FPC B1002 properly for the dial settings.

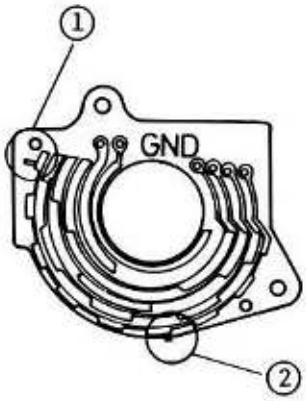

6-1 LEAD WIRES SOLDERING

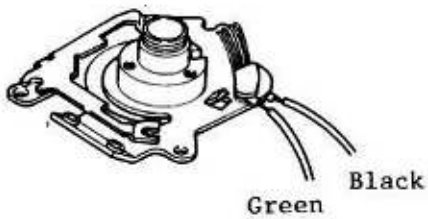

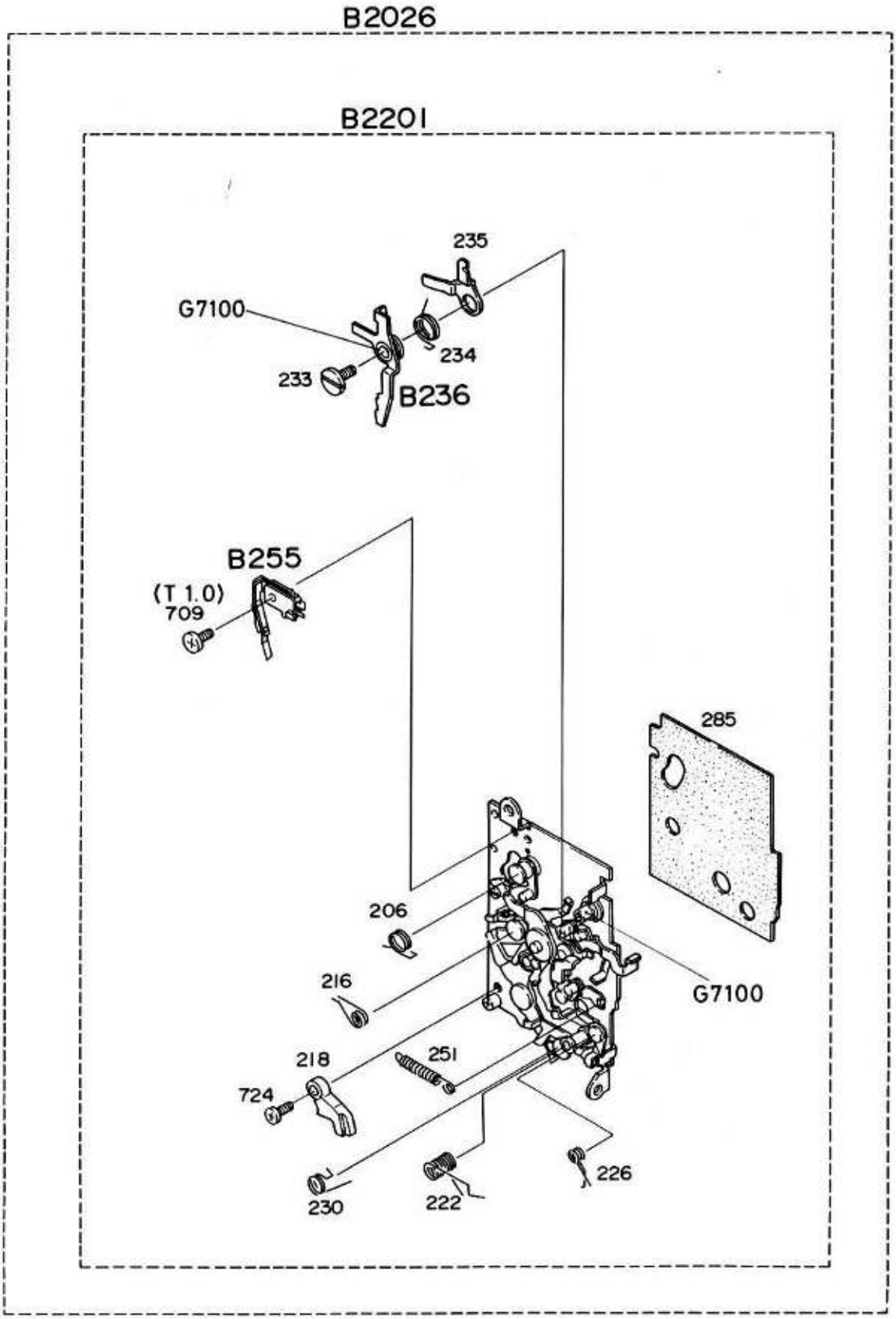
B2026
B2201
235
G7100
234
233
B236
B255
(T 1.0)
709
285
206
216
G7100
218
251
724
226
230
222

Fig. 7

7-1 SPRING HOOKS OF BASE PLATE I B2201 1B060-137-5

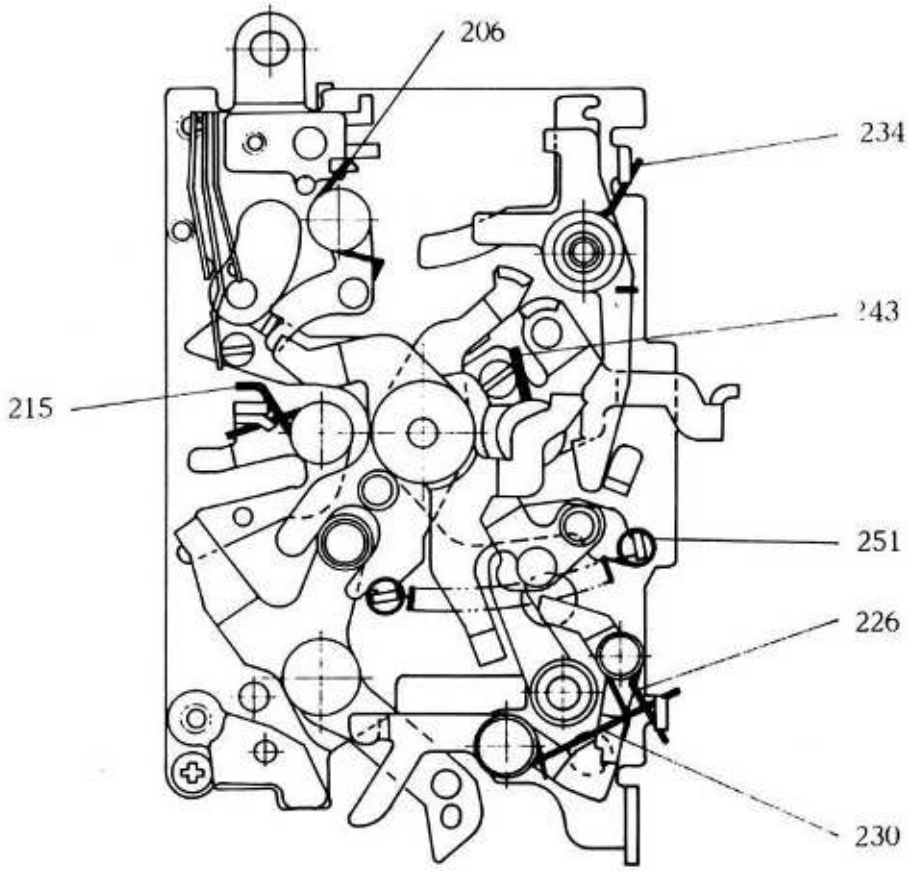

7-2 ROUTE OF MIRROR SWITCH AND DATA BACK SWITCH LEAD WIRES

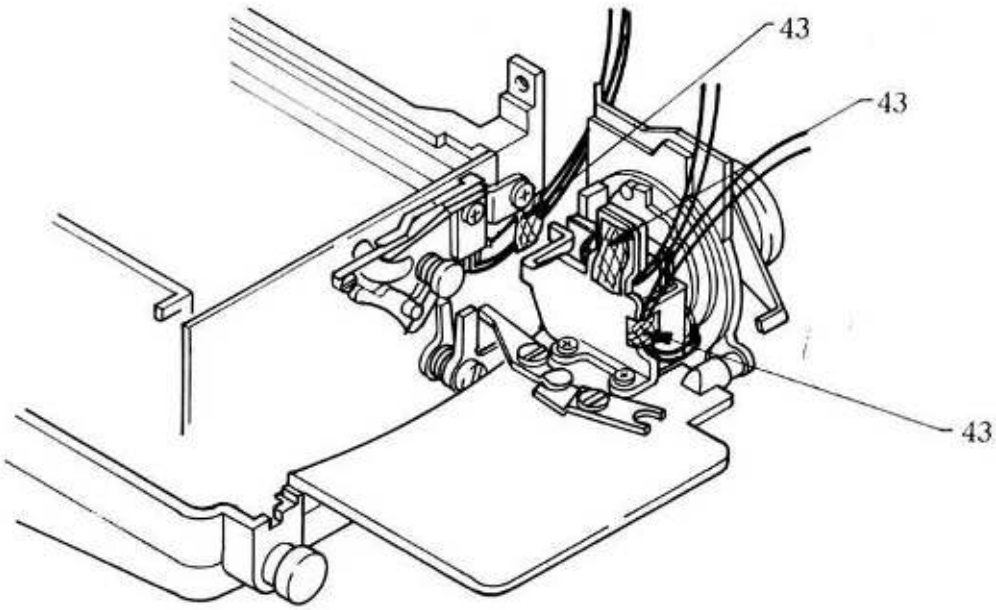

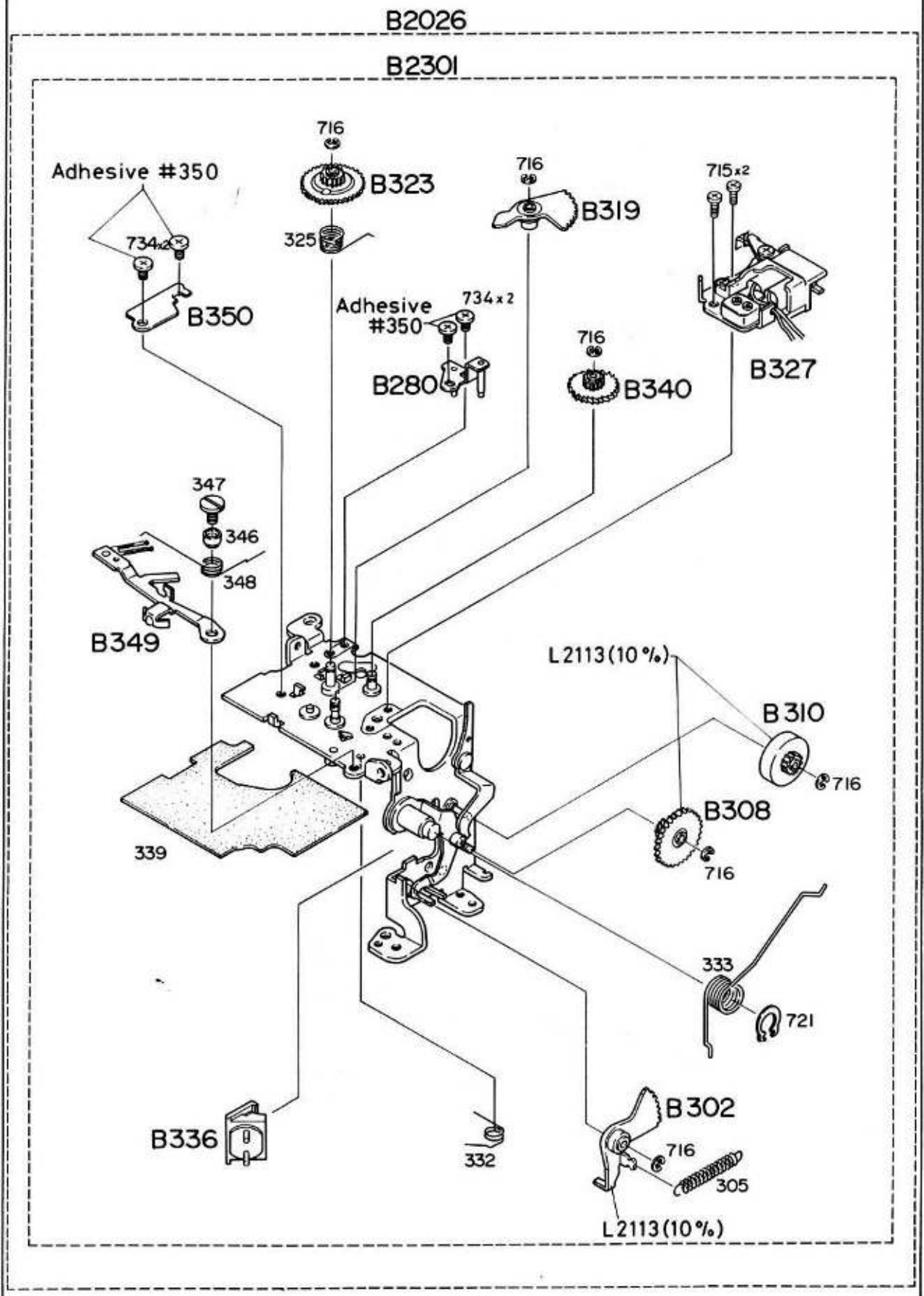
B2026
B2301
716
B323
Adhesive #350
716
B319
715x2
734x2
325
B350
Adhesive #350
734x2
B280
716
B340
B327
347
346
348
B349
L2113(10%)
B310
716
B308
716
339
333
721
B336
332
B302
716
305
L2113(10%)

Fig. 8

8-1 POSITIONING OF APERTURE CONTROL MAGNET REVERSE LEVER

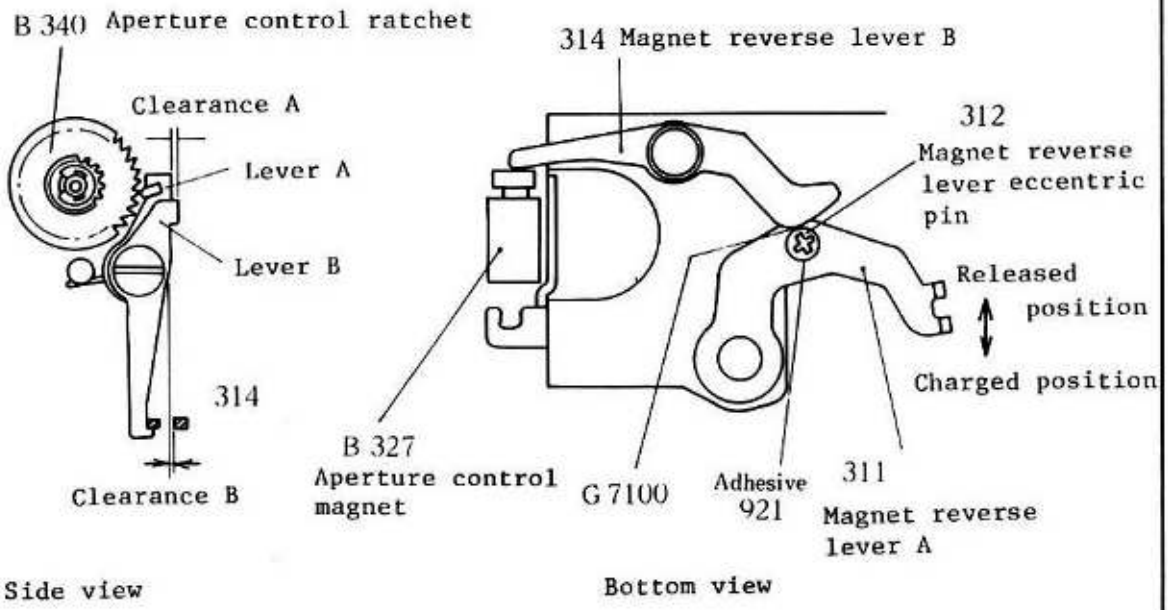

1) Adjust Magnet reverse lever eccentric pin #312 so that Clearance A between Lever A and Lever B can be 0.1 - 0.3mm in released position (mirror down).

2) Clearance B between Magnet reverse lever B #314 and Lever B should be 0.1mm or more when engaging Lever A with Aperture control ratchet B340 in charged position (mirror up).

8-2 FOCAL LENGTH (Fmm) SWITCH POSITIONING

Loosen Screws #734 and move focal length switch to the position where Distance A is 0.7mm.

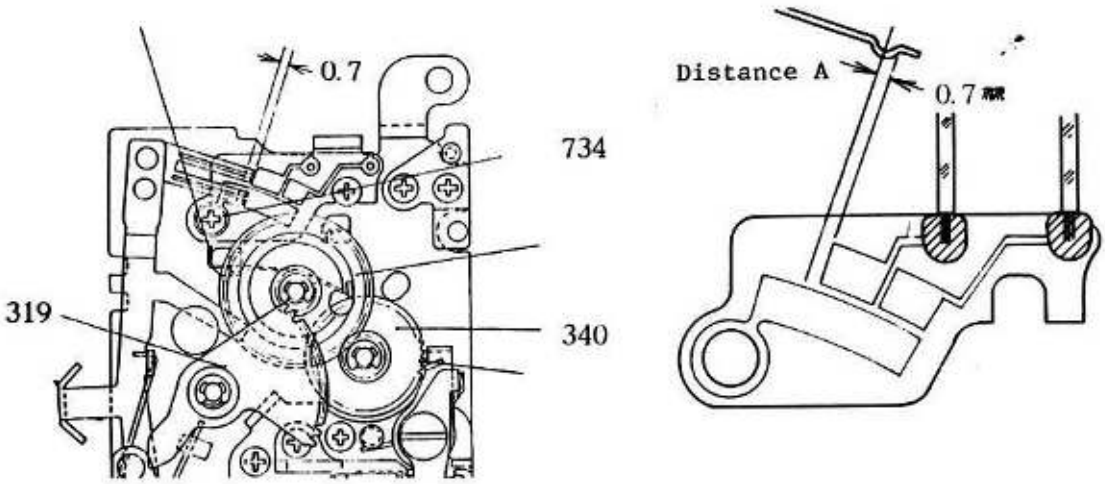

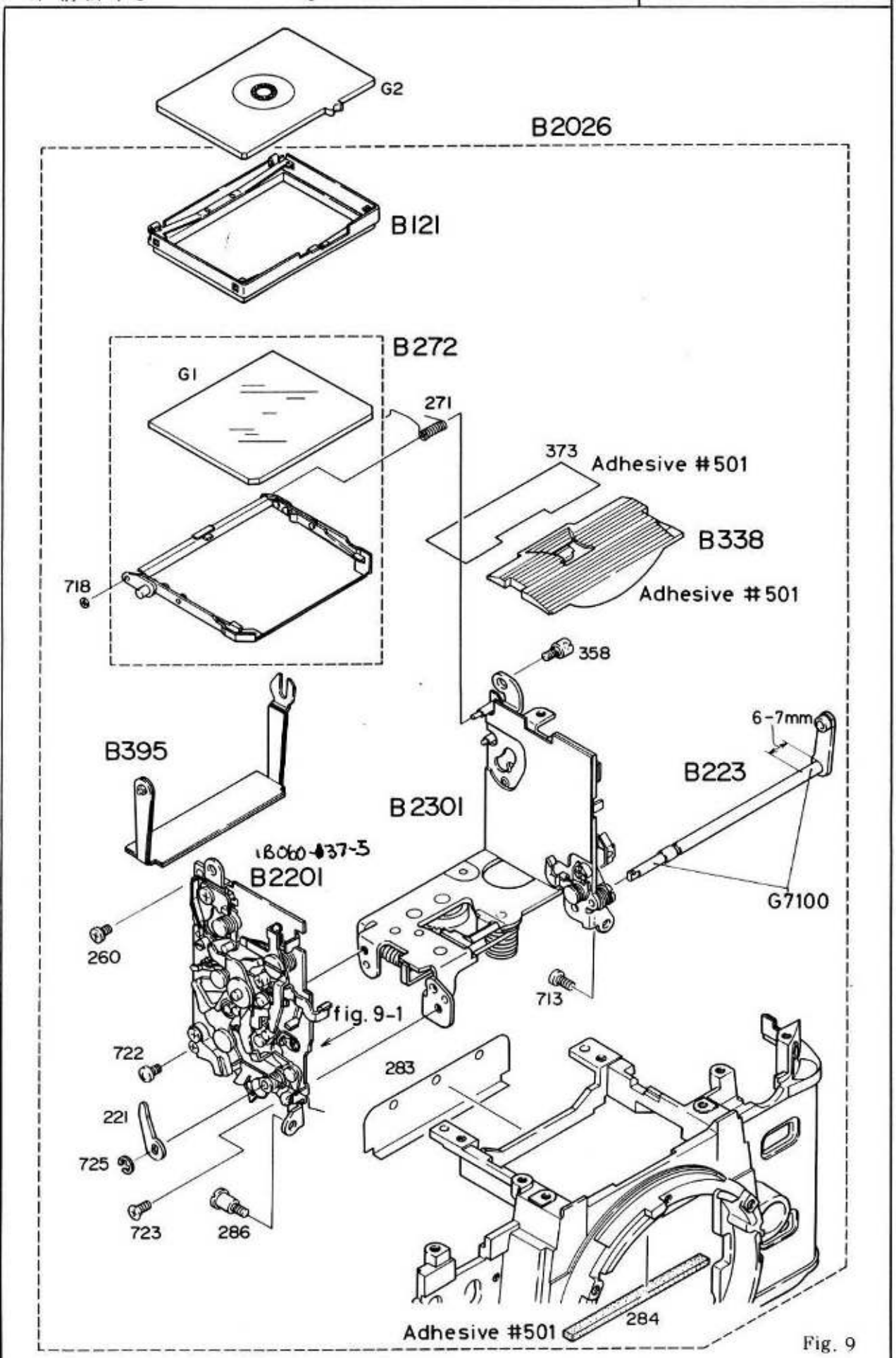
G2
B2026
B121
B272
G1
271
373
Adhesive #501
B338
Adhesive #501
718
358
6-7mm
B395
B223
B2301
1B060-037-5
B2201
G7100
260
713
fig. 9-1
722
283
221
725
723
286
284
Adhesive #501

Fig. 9

Fig. 9-1 SHUTTER RELEASE START POSITION

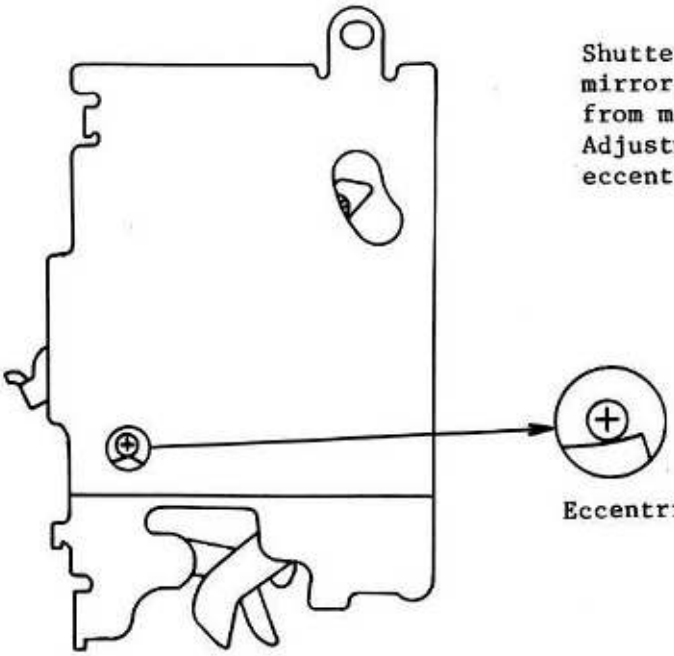

Shutter should be released when mirror rises to the position 1mm from mirror sponge.
Adjustment can be made by turning the eccentric screw inside Base plate I.

9-1 APERTURE LEVER HEIGHT ADJUSTMENT

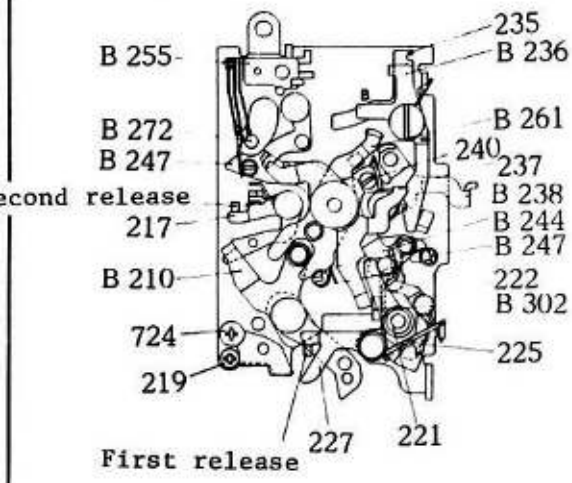

Charged position: $3.1^{+0.1}_{-0}$ mm

Adjustments can be made by turning Aperture lever eccentric pin #240

Released position: $3.1^{+0.7}_{+0.5}$ mm

Adjustments can be made by turning Eccentric pin #219 with loosening Screw #724

9-2 MIRROR CAGE INSTALLATION

When installing mirror cage, position Stop-down actuating lever B294 and Mechanical release lever B552 (see Figure 11) respectively to A and B in Figure 9-2.

1) Raise mirror to up position.

2) Place mirror down with finger and adjust #250 so that clearance *A is half of #253's thickness.

9-3 MIRROR SWITCH ADJUSTMENT

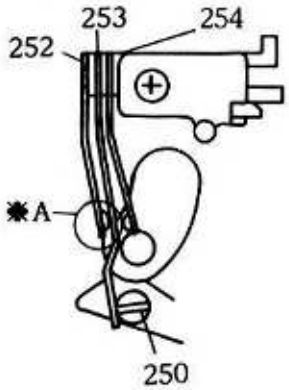

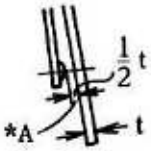

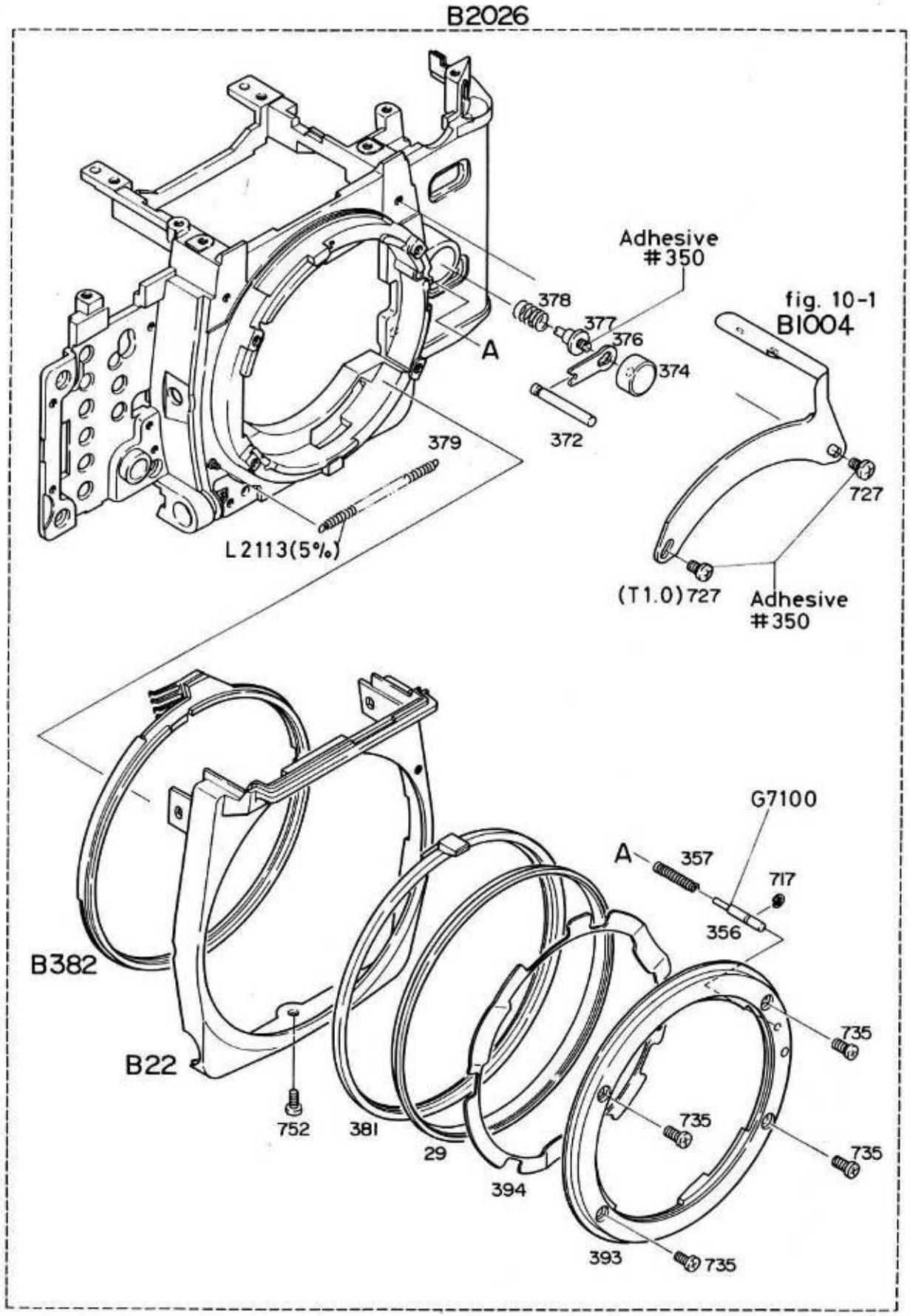
B2026
Adhesive
#350
378
377
376
374
372
A
fig. 10-1
B1004
727
(T1.0)727
Adhesive
#350
379
L2113(5%)
G7100
A
357
717
356
B382
B22
752
381
29
394
393
735
735
735
735

Fig.10

Fig. 10-1 f-fo FPC POSITIONING

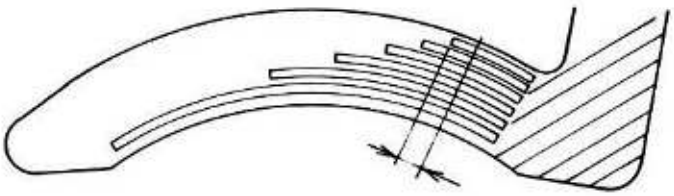

Loosen Screw #727 to slide f-fo FPC so that one tip of f-fo brushes can contact the shortest pattern on f-fo FPC at a distance of 1mm from left end.

f-fo FPC pattern

Fig. 10-2 Apply grease G7100 onto three inner-protruding sections of Bayonet spring #394.

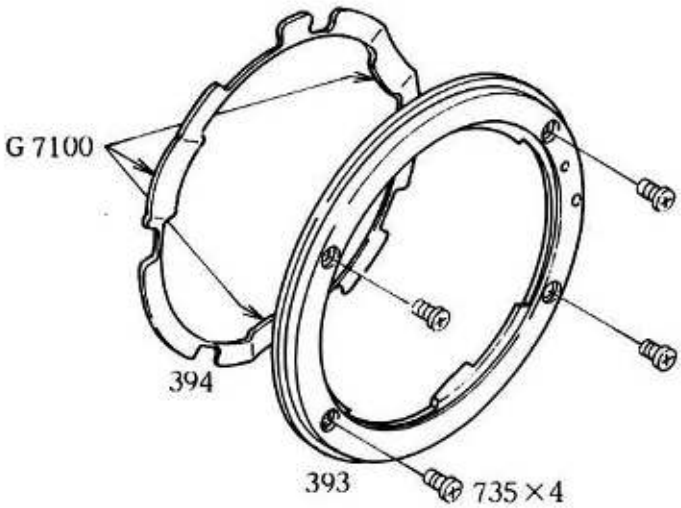

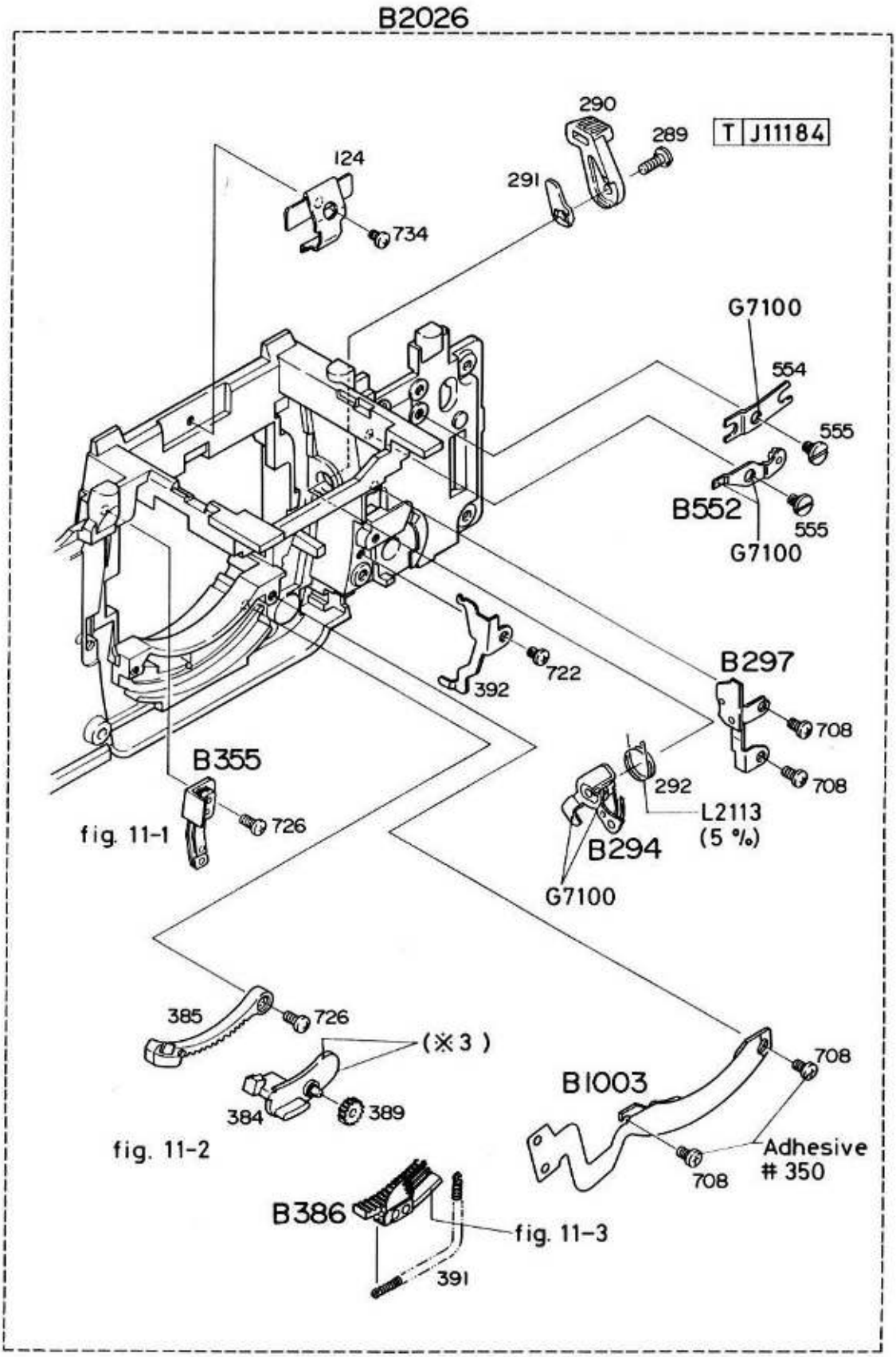
B2026
290
289
T J11184
124
291
734
G7100
554
555
B552
555
G7100
722
392
B297
708
708
292
L2113
(5 %)
B294
G7100
B355
726
fig. 11-1
385
726
(※3)
384
389
fig. 11-2
B1003
708
708
Adhesive
350
B386
fig. 11-3
391

Fig.11

Fig. 11-1 Place EE lens switch B355 to the upper-left side of body die-casting.

Fig. 11-2 fo BRUSH GEAR B386 INSTALLATION

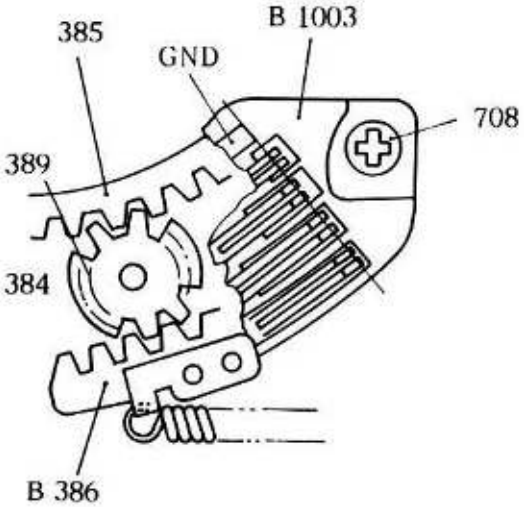

1. Place fo lens block to the right.
2. Engage fo gear #389 with the third tooth of fo retaining gear #385 and with the third clearance of fo brush gear B386.
3. Install fo FPC B1003 so that fo brushes can contact the right ends of GND patterns.

Fig. 11-3 Coat the working faces of fo lens block #384 and fo brush gear B386 with a pencil.

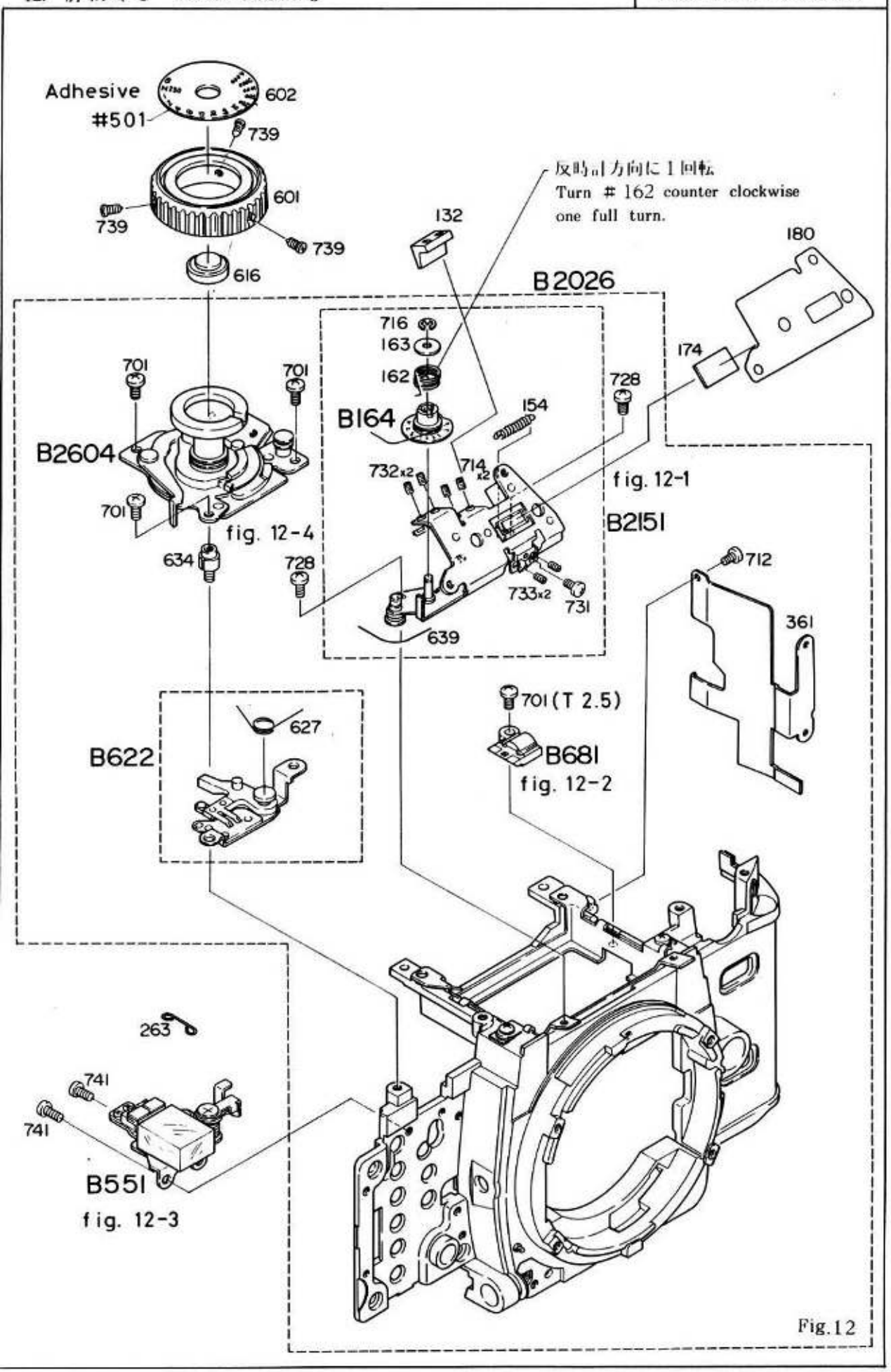
Adhesive
#501
602
739
601
739
739
616
132
反時計方向に1回転
Turn # 162 counter clockwise
one full turn.
180
B2026
716
163
162
174
701
701
728
B164
154
B2604
732x2
714
x2
fig. 12-1
701
fig. 12-4
B2151
634
728
712
733x2
731
361
639
701 (T 2.5)
627
B622
B681
fig. 12-2
263
741
741
B551
fig. 12-3

Fig. 12

Fig.12-1 VIEWFINDER INFORMATION POSITIONINGS

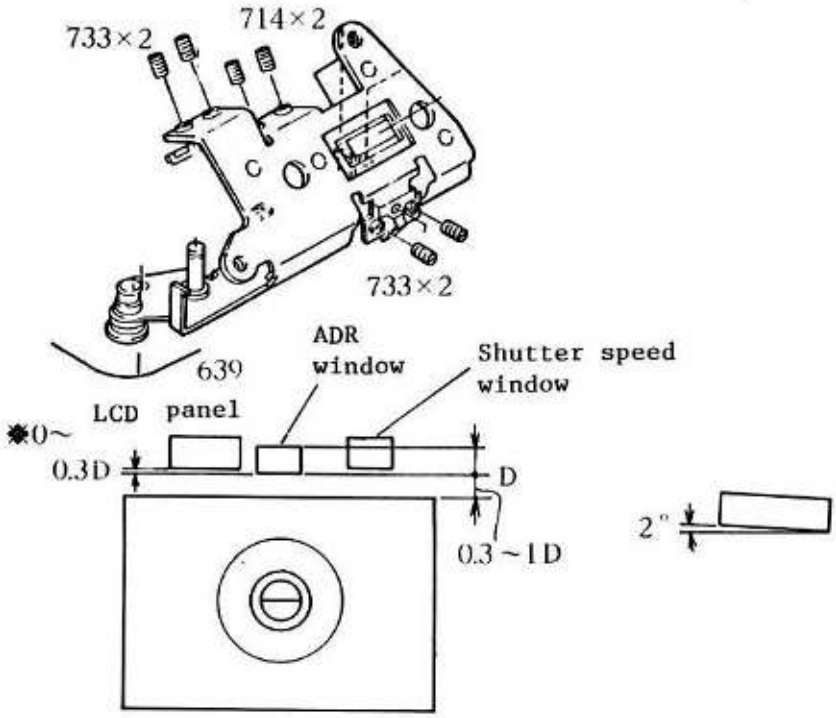

Adjustments are available only for vertical directions.

Information	Adjusting screws	Screw in		Screw out	
		Right screw	Left screw	Right screw	Left screw
Shutter speed window	#732	Right down	Left down	Right up	Left up
ADR window	#714	Right down	Left down	Right up	Left up
LCD panel	#733	Right up	Left up	Right down	Left down

Fig. 12-2 Exposure compensation LED positioning

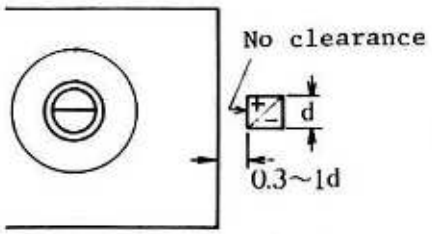

Inclination: 2° or less

Adjustments can be made by loosening Screw #701.
In case further adjustments are required, change the installing position of prism box.
In case the LED lighting is necessary for positioning, connect one lead wire (yellow) with a resistor of 200Ω to +3V and the other one (pink) to GND as a power supply.

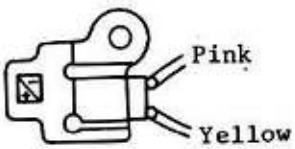

Fig.12-3 Place Release magnet unit B551 to rewind side.

Fig. 12-4 Hook one end of the connecting wire to Release magnet unit B551 and the other end to Release magnet coupling lever #235 as shown in the figure below.

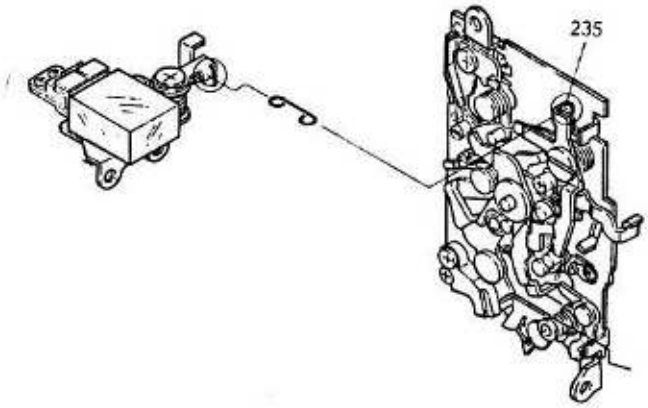

12-1 ROUTE OF LEAD WIRES, BOTTOM OF FRONT PLATE

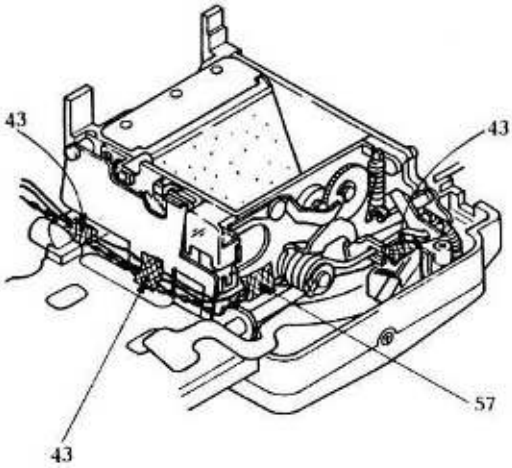

12-2 SHUTTER DIAL STRING INSTALLATION

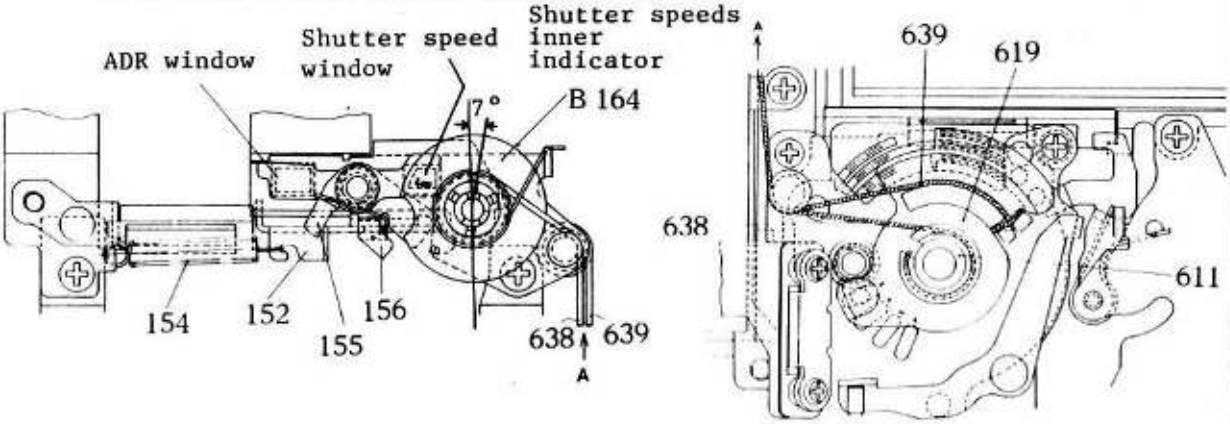

12-3 SHUTTER SPEEDS INNER INDICATOR STRING #638 INSTALLATION

1) Set shtter dial to 4000.

2) Pull the string so that the cutout of Tube #611 can position 7° from th vertical line in the figure.

3)

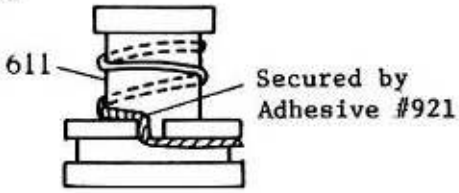

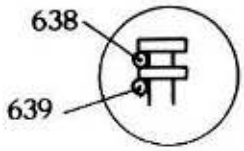

4) Wind the rest of string onto Tube #611.
Secure the end of string by Adhesive #921.

5) Turn indicator B164 so that "4000" can be visible through the shutter speed window.
Be careful not to scratch the shutter speeds inner indicator.

6) Turn shutter dial from 4000 to B one full turn to check the indications.

12-4 STRING #639 INSTALLATION

1) Set mode selector to P.

2) Pull string #639 until Spring #154 moves 0.5mm and secure the string temporarily.

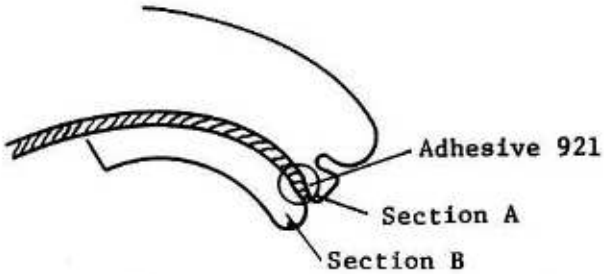

3) Change mode selector in the following order.

P → S → A → M → A → S → P

Check if the ADR and shutter speed windows can be shut properly.

4) Wind the string onto section A one full turn.

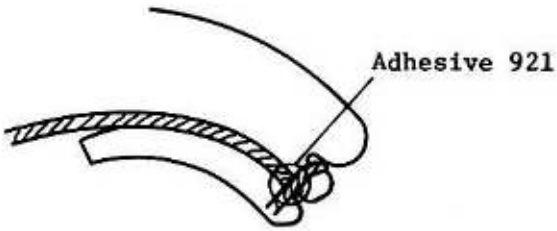

5) Wind the string onto Section B one full turn.

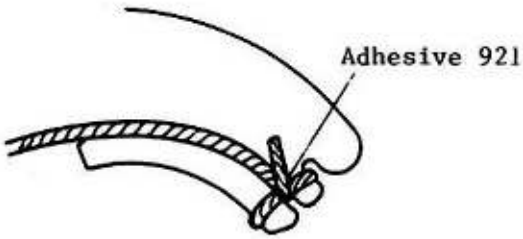

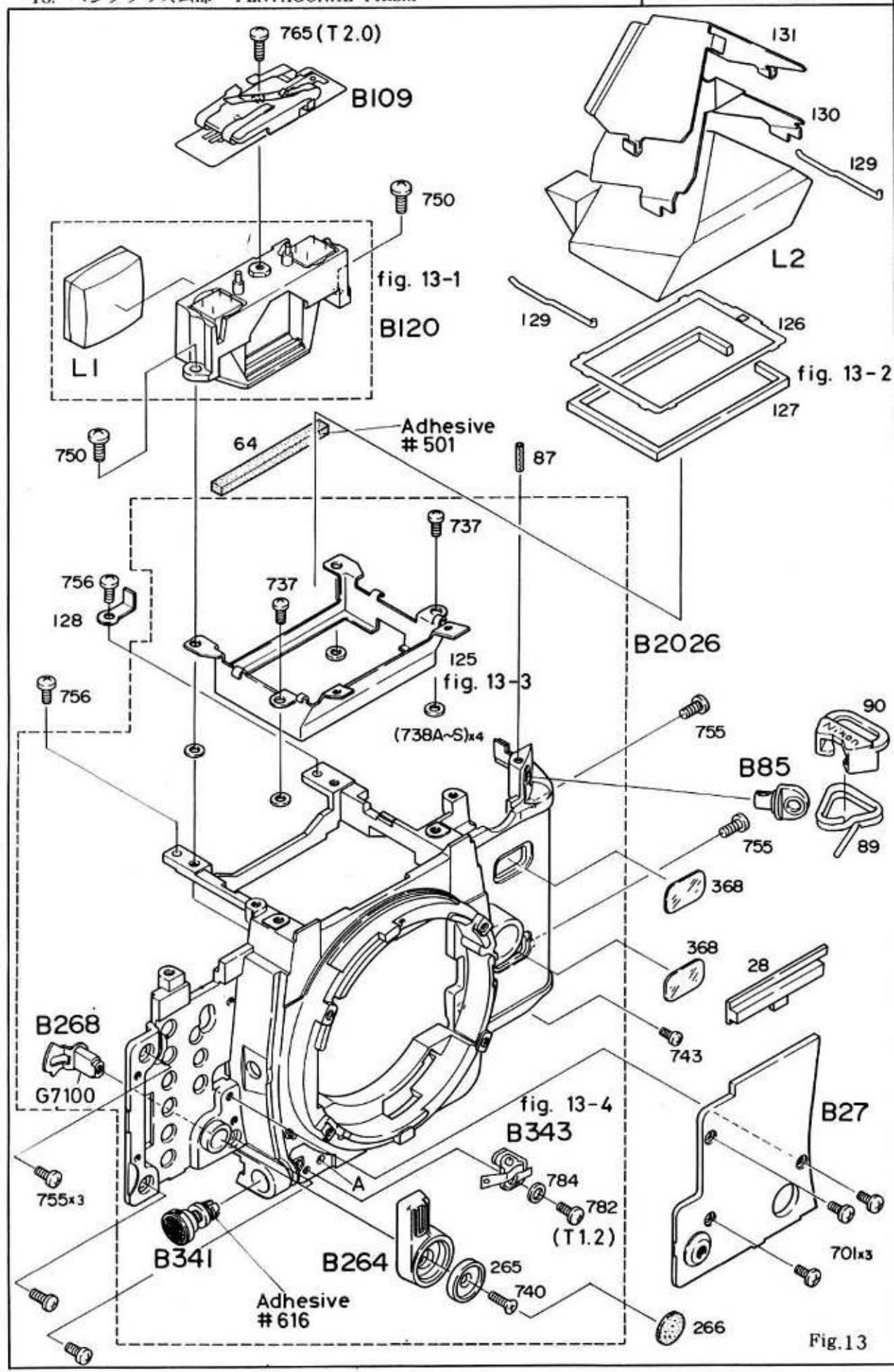
765 (T 2.0)
B109
750
fig. 13-1
B120
L1
750
131
130
129
L2
129
126
fig. 13-2
127
Adhesive
#501
64
87
737
737
756
128
125
fig. 13-3
(738A~S)x4
B2026
756
755
90
B85
755
89
368
368
28
743
B268
G7100
fig. 13-4
B343
B27
755x3
A
784
782
(T1.2)
701x3
B341
B264
265
740
Adhesive
#616
266

Fig.13

Fig. 13-1 As the positioning of SPDs is tricky, replace Eyepiece mold B120 when replacement of SPD is required.

Fig. 13-2 Viewfield frame #126 and Screen frame spacer #127 should installed, with the wider frames (A) to the eyepiece side positioned.

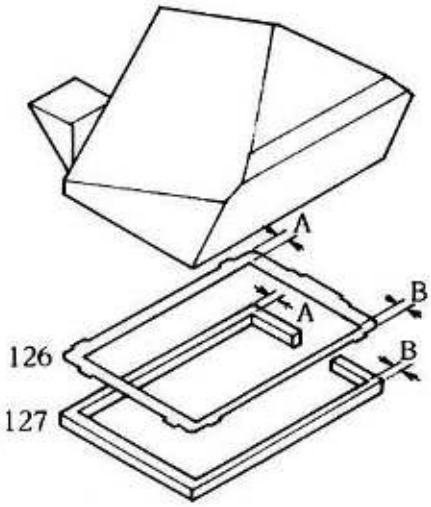

A > B

Fig. 13-3 Infinity focus adjustment

Adjustments can be made by selecting Washers #738 A - U of different thickness.

Standard: 46.5 ± 0.07mm

Mirror 45° angle adjustment

Adjustments can be made by turning Eccentric pin #329 inside the mirror cage.

Standard: 45° ± 10' (Vertical)
45° ± 20' (Horizontal)

Refer details to the repair manual for the FM2.

Fig. 13-4 Route the lead wire of Meter mode switch through opening A of body die-casting.

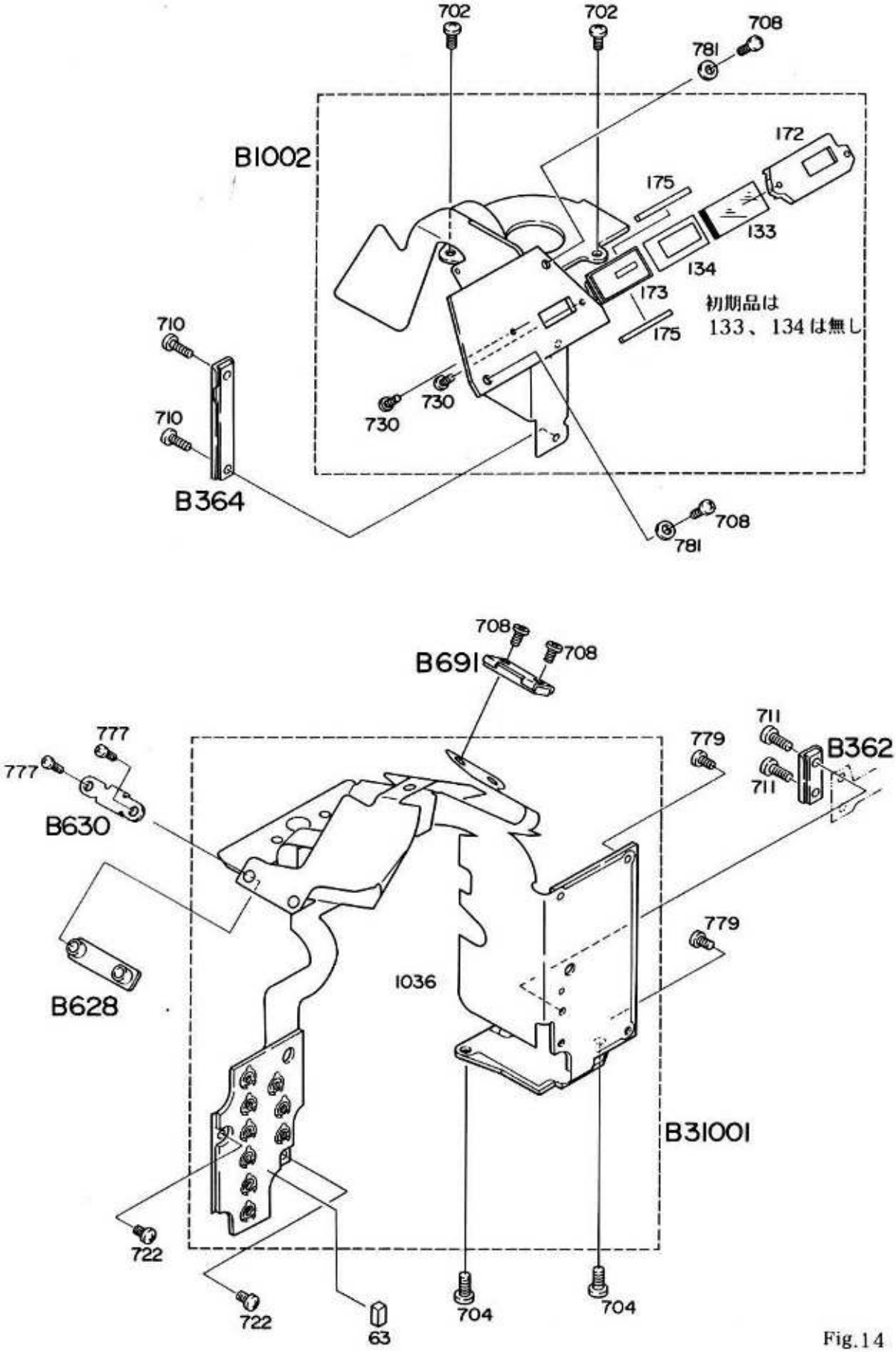
702
702
708
781
B1002
172
175
133
134
173
175
初期品は
133、134は無し
710
710
730
730
B364
708
781
708
B691
708
711
B362
711
777
777
B630
779
779
B628
1036
B31001
722
722
63
704
704

Fig.14

14-1 MAIN FPC, ASA/LCD FPC INSTALLATION

Mount 50/1.4 AI-S lens

↓

Rewind side screws tightening

B362
⊕ 711x2

↓

fo FPC press-contact

⊕ 779x2

↓

FPC bending

↓

Variable resistor block screw tightening

⊕ 722x2

↓

Rewind side lead wires soldering

Six lead wires

↓

SPD lead wires soldering

Clean the solder joints with alcohol and apply moisture-proof coating to them after soldering.

↓

Prism (upper) lead wires soldering

↓

ASA/LCD FPC installation (press-contact)

B364 ⊕ 729x2,
⊕ 710x2, ⊕ 781x2

↓

ASA/LCD FPC bending

Hook the opening of ASA/LCD FPC to the claw of Prism retainer #130.
(Refer to Wiring diagram)

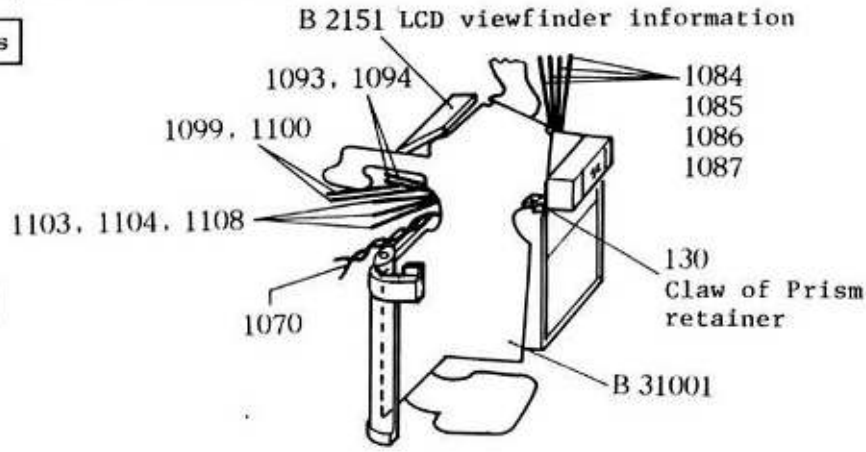

Place fo FPC B1003 between LCD viewfinder information B2151 and claw of Prism retainer #130, and bend the FPC along the shape of pentagonal prism.

Route of lead wires:
1) Rewind side: To bayonet side
2) Film-advance side: To upper side

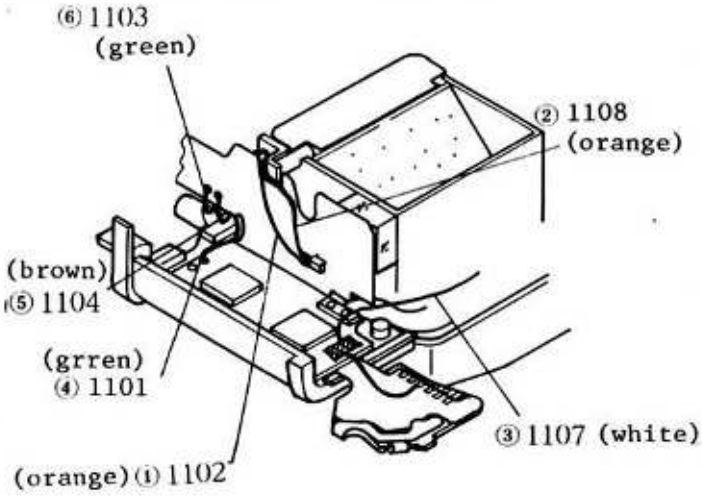

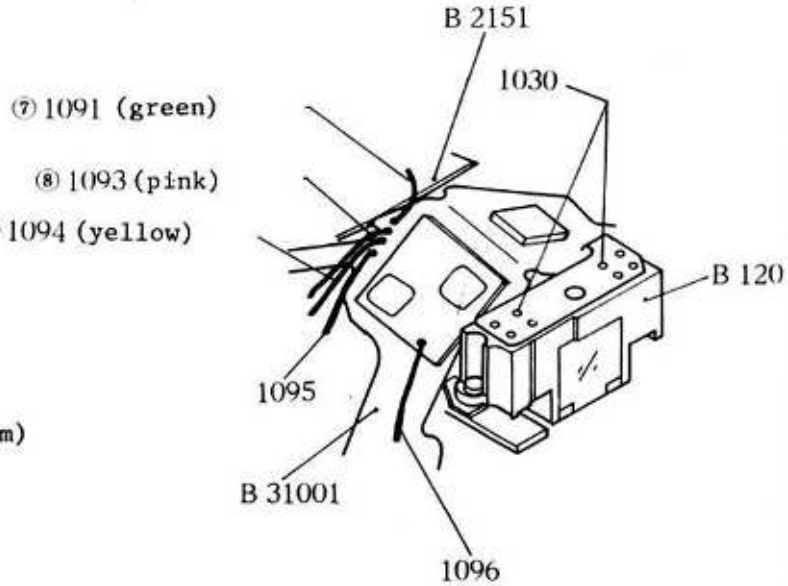

14-2 MAIN FPC CHECKING AFTER REPLACEMENT (FRONT PLATE SEPARATED)

Set shutter dial to other than B and M250

↓

Mount 50/1.4 AI-S lens

↓

Ground trigger terminal at the back of Main FPC

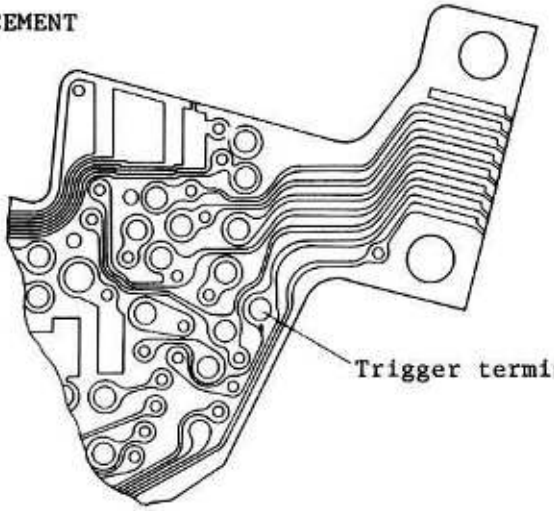

↓

Connect Lead wire #1086 (black) to GND and Lead wire #1110 (pink) to power source of 3V

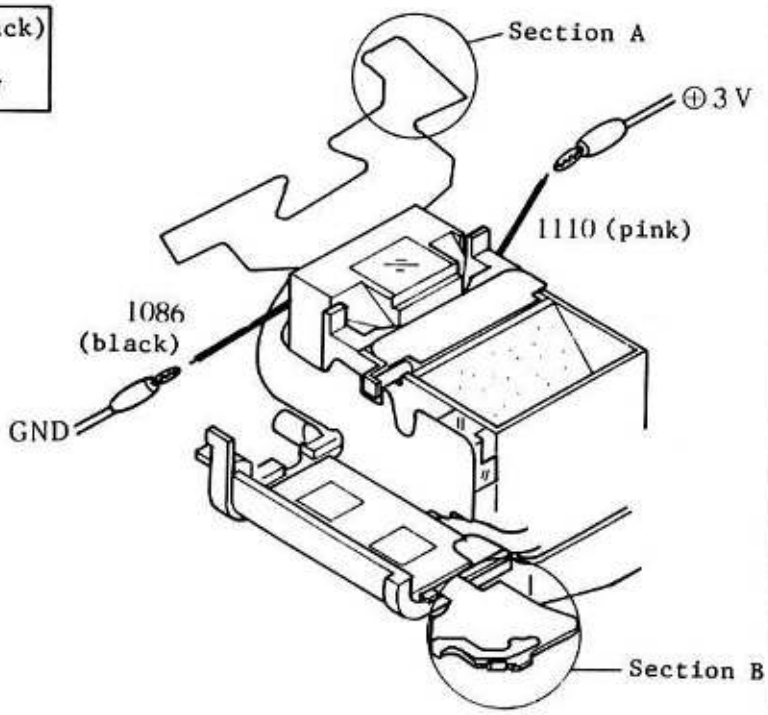

↓

Short-circuit power switch pin with one of GND pins

Avoid short-circuit with other pins.

↓

LCD readout check

The contents of readout are not concerned.

↓

Ceramic oscillator check

Measure the leads of oscillator.

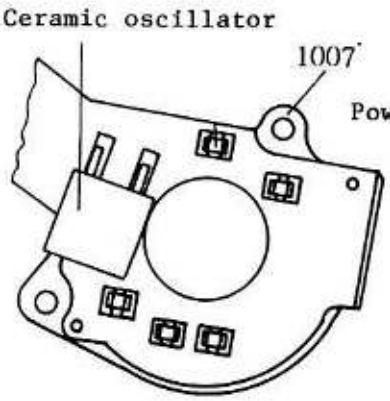

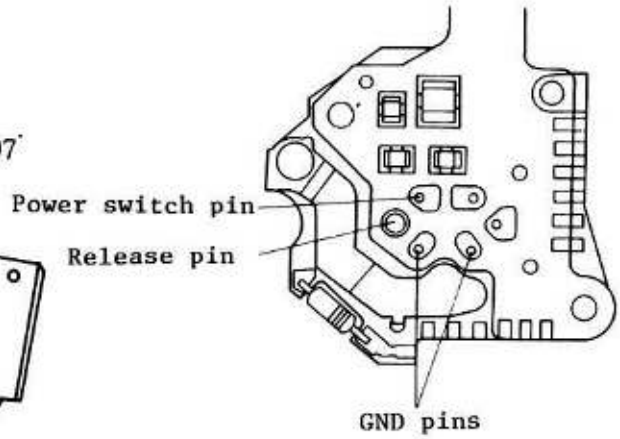

1

1

ASA base plate press-contact checking

Use an oscilloscope to measure the voltage of each terminal.

Terminals A - E: High
GND: Low

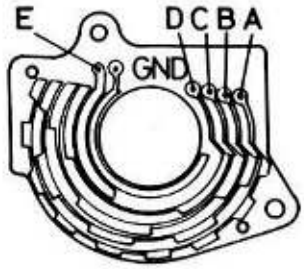

D/A converter checking

Connect an oscilloscope to the head amplifier side of condenser C12 to see the wave form.

VOLTS/DIV: 10 mv
TIME/DIV: 2 ms

Calculation

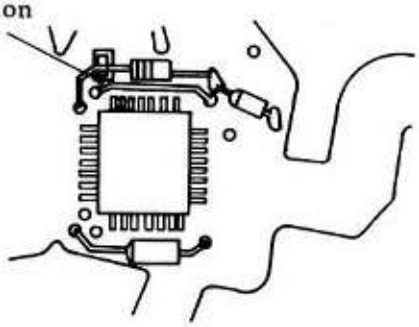

Meter mode sw off

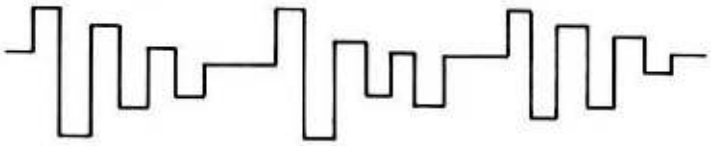

Meter mode sw on

16 sec.-hold checking

When disconnecting short-circuit between power switch pin and GND pin, the LCD should be turned off after 16 sec..

Release signal checking

Use an oscilloscope to measure the voltage of terminal 11.

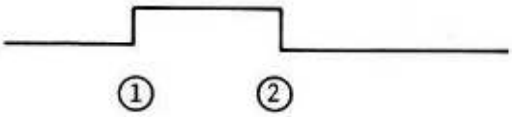

1: Power switch pin ON

2: Release pin ON

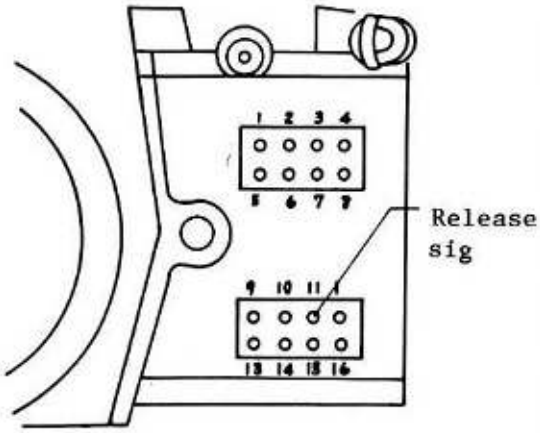

14-3 FRONT PLATE UNIT/BODY DIE-CASTING INSTALLATION

Front plate settings:
1. Charge mirror
2. Set shutter dial to B
3. Set self-timer lever to rest position

Charge shutter

Install front plate
Fit Release lever pin #557 with Mechanical release lever #555. Observe it through opening A. Remove Shutter dial lock lever #426.

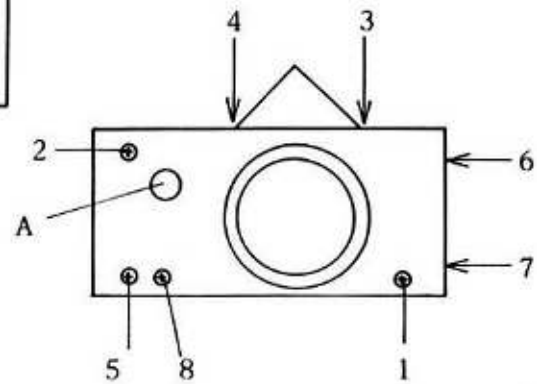

Place and hold front plate toward lower-left (film-advance side). Release shutter with holding Front plate.

Tighten screws of front plate temporarily

Refer to the right figure.

Solder and arrange lead wires at the bottom of body.

#704x2

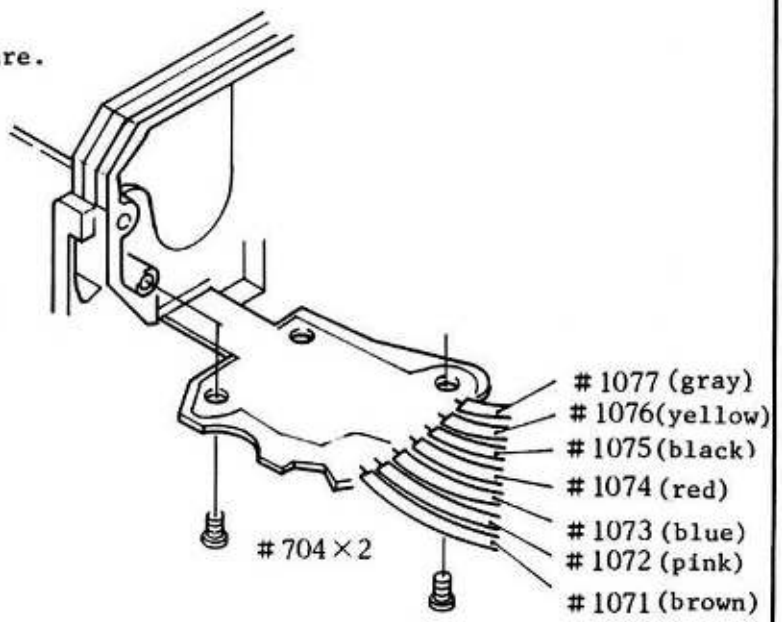

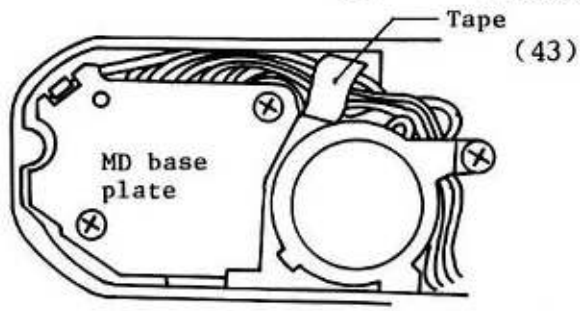

1

1

Solder twelve lead wires to FPC B31001

Shoe contact mold

⊕ 765

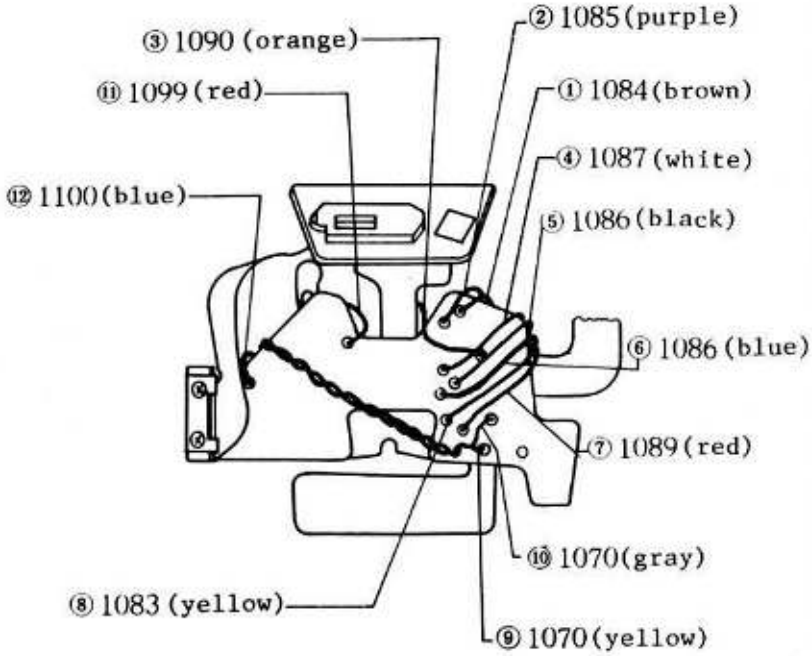

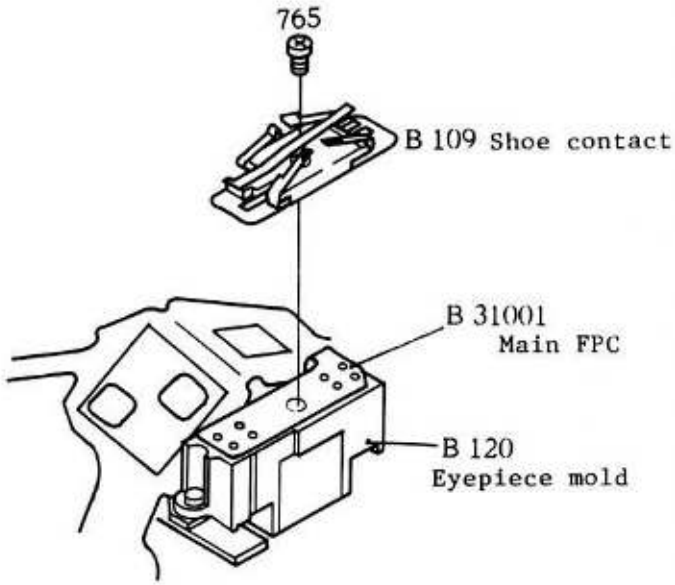

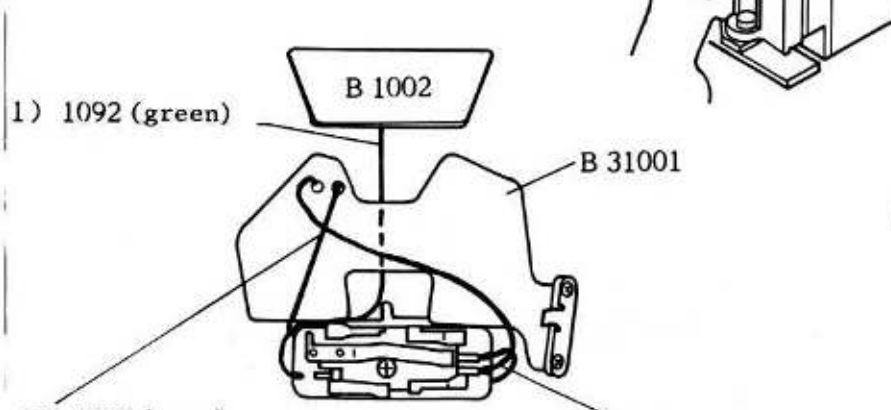

Solder lead wires to shoe contact

↓

Tighten screws of ASA base plate — Fig.14

⊕ 702x2

Extend Lead wires #1095 (black) and #1096 (green) from the side of sync terminal.

↓

Install ASA dial base plate B2661 and solder lead wires — Fig.6

⊕ 701x3

↓

Press-contact main FPC with fo FPC — Fig.14

B692

⊕ 708x2

↓

Solder lead wires to upper main FPC

↓

Press-contact shutter dial, main and shutter control FPCs.

B630 — Fig.14

B628

⊕ 777x2

Route lead wires under FPCs when installing

↓

Provide ASA base plate brush positioning

Fig.6

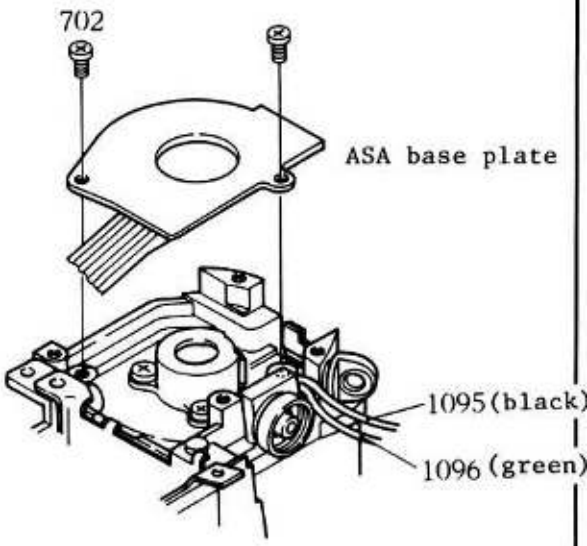

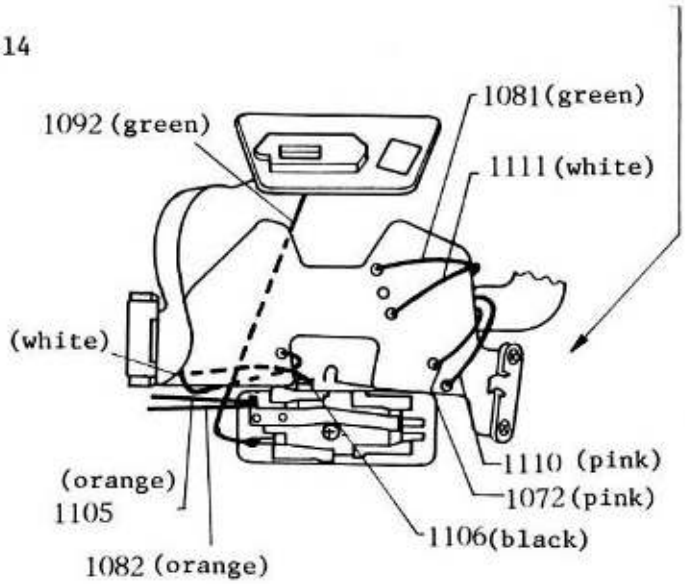

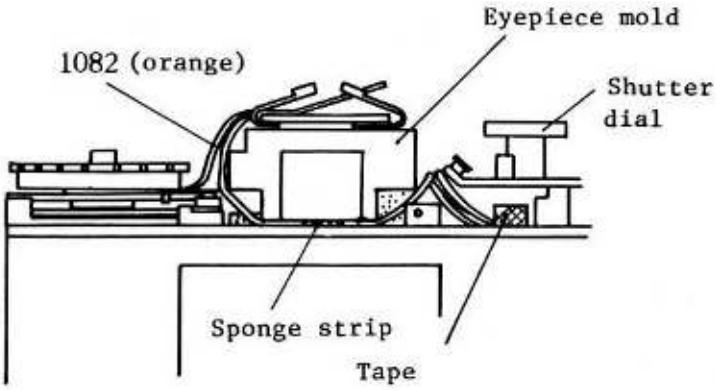

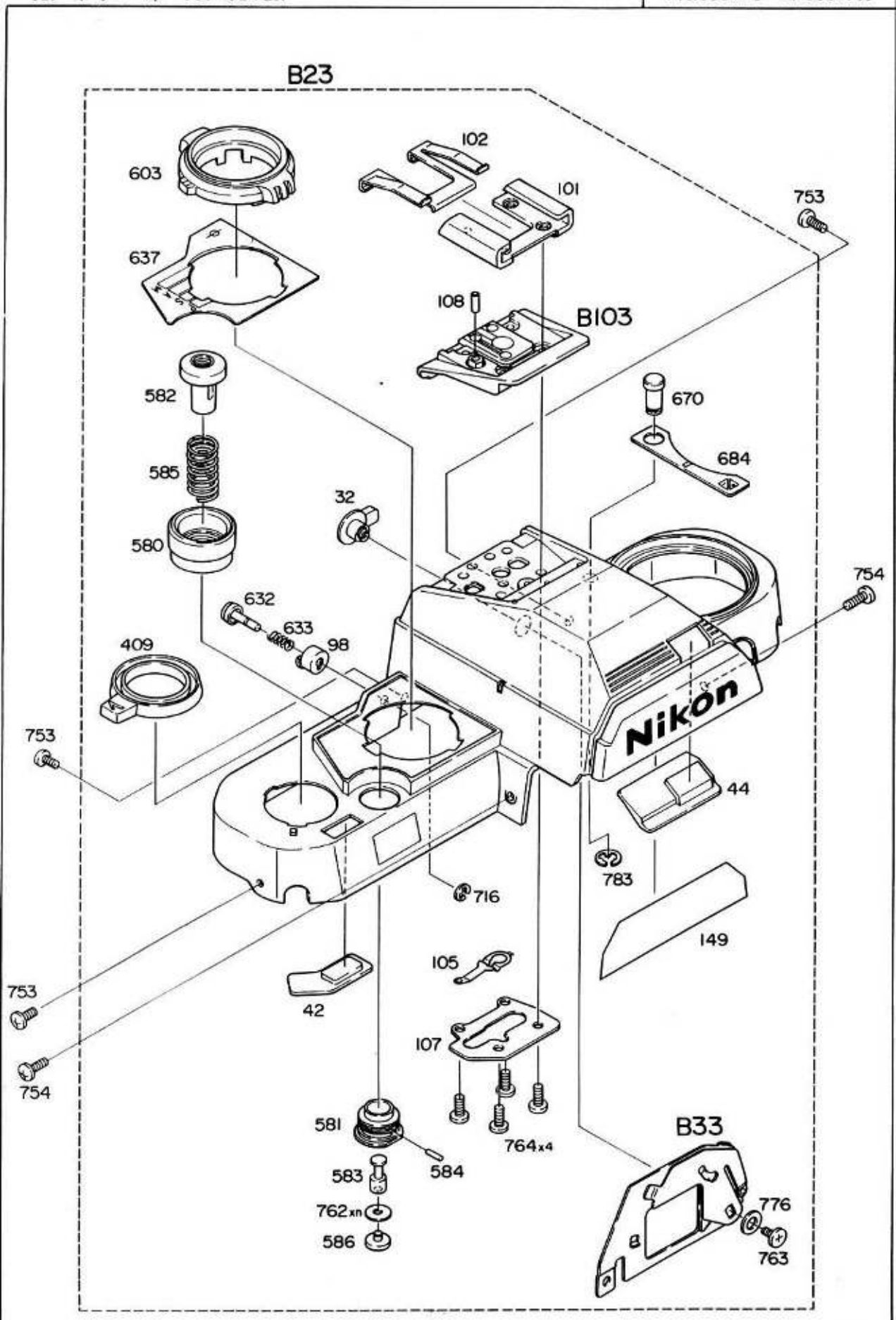
B23
603
102
101
753
637
108
B103
582
670
684
585
32
580
754
632
633
98
409
Nikon
753
44
783
716
149
105
753
42
107
754
581
764x4
B33
584
583
762xn
776
586
763

Fig.15

15-1 SHUTTER SPEED ACCURACY ADJUSTMENTS

Remove bottom cover → Remove battery chamber lid → Connect camera to AMP tester → Switch AMP tester on → Half sw: P, H/L sw: L → S1 = 0 → MO/AD = 0 → Set ASA dial to 100 → Attach 50/1.4 AI-S lens to camera and use shutter tester SF-4DNS. Check and adjust step 1-6. → Set a standard reflector to camera and close camera back. → Connect strobo dummy connector → Check and adjust step 7

Step 1-7 are detailed on next page.

Refer AMP tester J18147 to the utility manual separately available.

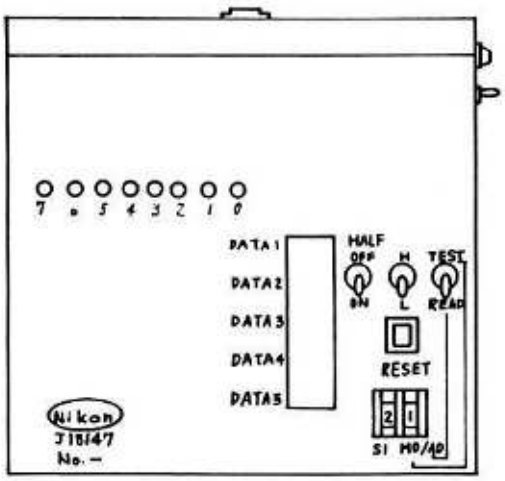

AMP tester front panel

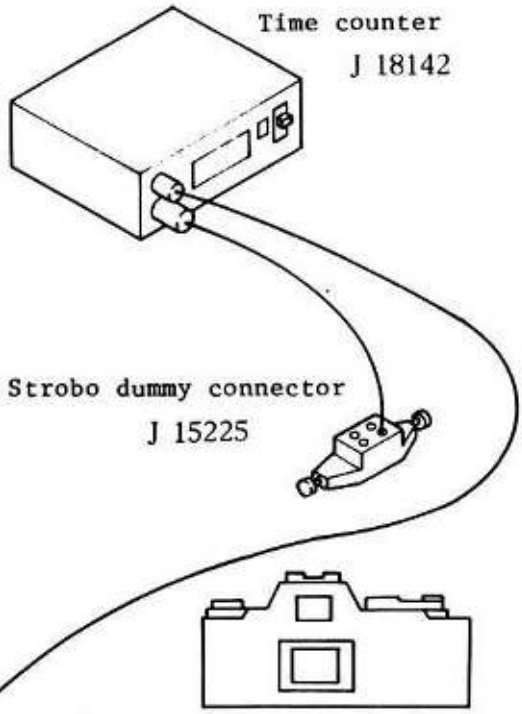

Time counter
J 18142

Strobo dummy connector
J 15225

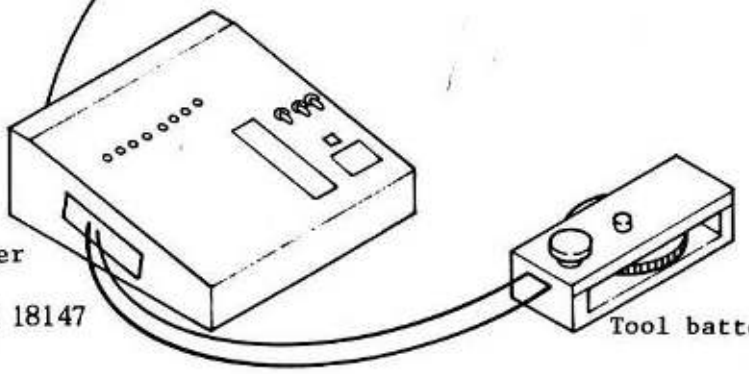

AMP tester
J 18147

Tool battery

Adjustments

* LV 11.833 is equel to LC 12-1/6.

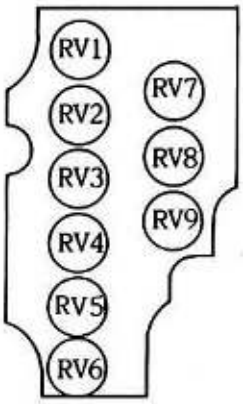

Variable resistors block

1	Shutter speeds delivery for blank exposure	1) Reset frame-counter to S. 2) Set shutter dial to 1 - 4000 Standard: 3.906 ms (2.86 - 5.84)
		Set frame-counter to 1 or more
2	Shutter speeds delivery on M mode	T = 1/4000 sec. 0.244 ms (0.179 - 0.334) T = 1/1000 sec. 0.977 ms (0.715 - 1.334) T = 1 sec. 1.000 ms (812 - 1231)
3	AMP adjustment	1) Set mode changeover knob to P, S or A. 2) Turn meter mode switch off. 3) AMP tester setting: S1 = 0, MO/AD = 0, H/L sw = L, HALF sw = ON Center: Turn RV2 to adjust DATA 1 from 23 to 24 at LV 11.833 Off-center segment 1: Turn RV3 to adjust DATA 2 from 23 to 24 at LV 12 segment 2: Turn RV4 to adjust DATA 3 from 23 to 24 at LV 12 segment 3: Turn RV5 to adjust DATA 4 from 23 to 24 at LV 12 segment 4: Turn RV6 to adjust DATA 5 from 23 to 24 at LV 12
	Checking	DATA 1 should be 24 at LV 12. DATA 2-5 should be 23 at LV 11.833.
		Turn Meter mode switch on.
4	Shutter speeds delivery on A mode	Setting: LV12, F5.6, 1/125 sec. Adjustments can be made by turning RV9. Standard: 7.81 ms (5.15 - 11.84 ms)
	Checking	Shutter speeds: 0.623 - 1.533 ms (LV15, F5.6) (LV6, F5.6)
5	Shutter speeds delivery on S mode	Setting: LV12, F16, 1/125 sec. Adjustments can be made by turning RV1. Standard: 7.81 ms (5.72 - 10.67 ms) F5.6 (5.10 - 6.28)
	LCD readout	F5.6
6	Shutter speeds delivery on P mode	Setting: LV12, F16, 1/125 sec. Adjustments can be made by turning RV8. Standard: 7.8 ms (5.72 - 10.67 ms) F5.6 (5.10 - 6.28)
	Checking	Shutter speed: 2.02 - 3.77ms, F6.72 - 13.45 (LV15, F16) 16.18 - 30.19 ms, F2.38 - 4.75 (LV19, F16)
	LCD readout	125 (LV12, F16) FEE (LV12, F8)
7	Sync speed on TTL mode	Setting: LV15, F1.4, Automatic mode Adjustments can be made by turning RV7. Standard: 0.09 ms $^{+0.013}_{-0.012}$
	LCD readout	250 (ready-light LED glowing)

15-2 SWITCHES/GRAY CODE CHECKING

The switches and gray codes can be checked by AMP tester J18147 without disassembling top cover.
Refer the AMP tester to p.A35, shutter speed accuracy adjustment and its utility manual.

ASA dial gray codes (SV)

SI = $0
MO/AD = $8

*1: ASA film speed

*1	LED4	LED3	LED2	LED1	LED0
12+1	OFF	OFF	OFF	OFF	OFF
12	OFF	OFF	OFF	ON	OFF
50	OFF	ON	ON	OFF	ON
100	OFF	ON	OFF	ON	OFF
400	ON	ON	OFF	ON	ON
800	ON	ON	ON	ON	ON
3200	ON	OFF	ON	ON	OFF

Shutter dial gray codes (TV)

SI = $0
MO/AD = $9

*2: Shutter speed

*2	LED3	LED2	LED1	LED0
1	OFF	OFF	OFF	OFF
2	OFF	OFF	OFF	ON
4	OFF	OFF	ON	ON
8	OFF	OFF	ON	OFF
15	OFF	ON	ON	OFF
30	OFF	ON	ON	ON
60	OFF	ON	OFF	ON
125	OFF	ON	OFF	OFF
250	ON	ON	OFF	OFF
500	ON	ONJ	OFF	ON
1000	ON	ON	ON	ON
2000	ON	ON	ON	OFF
4000	ON	OFF	ON	OFF

f-fo gray code (AV)

SI = $0
MO/AD = $A

*3: Aperture

*3	LED4	LED3	LED2	LED1	LED0
1.4	OFF	OFF	OFF	OFF	OFF
2	OFF	OFF	OFF	ON	OFF
2.8	OFF	OFF	ON	OFF	ON
4	OFF	ON	ON	OFF	ON
5.6	OFF	ON	OFF	ON	OFF
8	OFF	ON	OFF	OFF	OFF
11	ON	ON	OFF	ON	ON
16	ON	ON	ON	ON	ON

fo gray code (AVo)

SI = $0
MO/AD = $B

fo \ LED	3	2	1	0
	OFF	OFF	OFF	OFF
1.2	OFF	OFF	OFF	ON
1.4	OFF	OFF	ON	ON
1.8	OFF	OFF	ON	OFF
2	OFF	ON	ON	OFF
2.5	OFF	ON	ON	ON
2.8	OFF	ON	OFF	ON
3.5	OFF	ON	OFF	OFF
4	ON	ON	OFF	OFF
4.5	ON	ON	OFF	ON
5.6	ON	ON	ON	ON
8	ON	ON	ON	OFF
11	ON	OFF	ON	OFF

Focal length (Fmm) sw

EE lens sw

SI = $0
MO/AD = $C

Focal length \ LED	1	0
Normal	ON	ON
135mm or more	ON	OFF
Teleconverter	OFF	ON

Fmm sw

Pin \ LED	2
Out	ON
In	OFF

EE lens sw

Mode changeover sw

Counter sw

SI = $0
MO/AD = $D

Mode \ LED	1	0
P	OFF	OFF
S	ON	OFF
A	ON	ON
M	OFF	ON

Mode changeover sw

Counter \ LED	5
S - S2	ON
1 - 36	OFF

Counter sw

Stop-down sw

SI = $0
MO/AD = $D

LED	4
Stop-down	OFF
Normal	ON

Stop-down sw

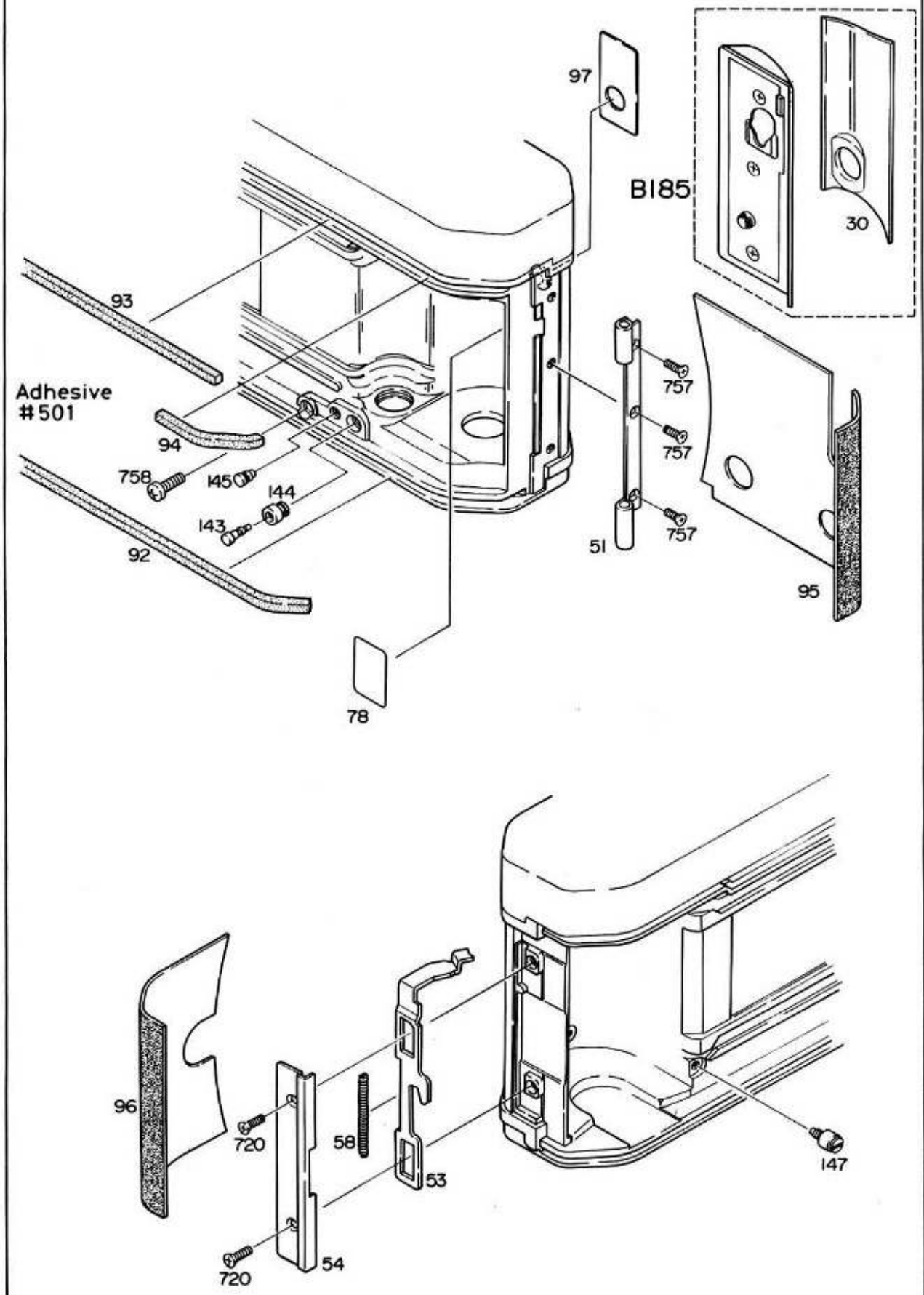
97
B185
30
93
Adhesive
#501
94
758
145
144
143
92
757
757
757
51
95
78
96
720
58
53
720
54
147

Fig.16

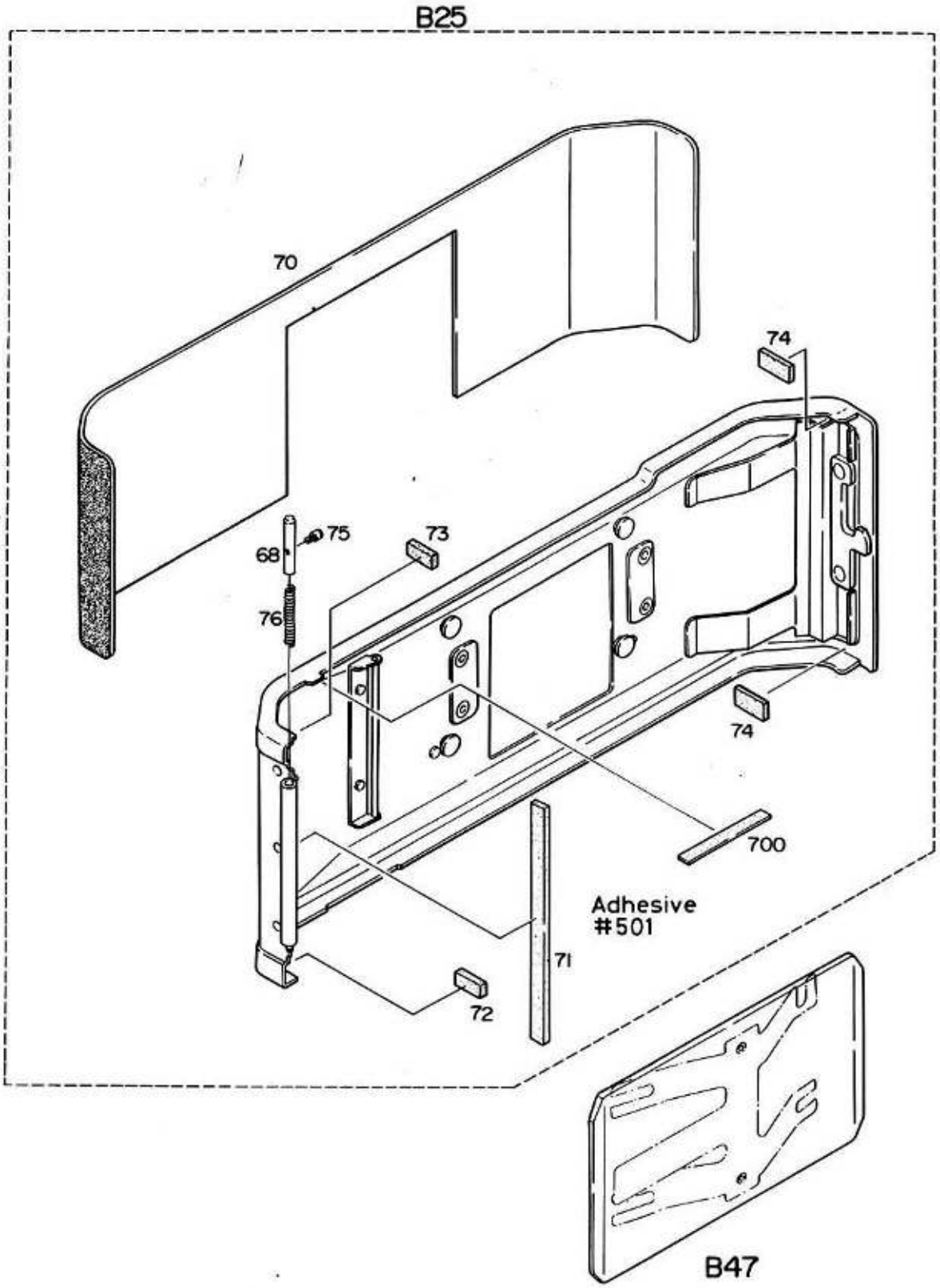

Fig.17

ELECTRIC CIRCUIT

Contents Page

CAMERA OPERATION BLOCK DIAGRAM E1

CIRCUIT OPERATION OUTLINE E2

AUTOMATIC MULTI-PATTERN METERING (AMP) OUTLINE E6

CIRCUITRY ARCHITECTURE E8

WIRING DIAGRAM E11

CIRCUIT DIAGRAM E12

SWITCHES E13

CHECKING LANDS (TOP) E15

CHECKING LANDS (BOTTOM) E16

HEAD AMPLIFIER TERMINALS E17

ANALOG HIC TERMINALS E18

DIGITAL HIC TERMINALS E19

ASA DIAL/LCD VIEWFINDER INFORMATION FPC TERMINALS .. E21

RESISTOR BLOCKS, MD BASE PLATE E22

LCD READOUT E24

GRAY CODE TABLES E27

TIMING CHART

1. Metering sequence E31
2. Shutter release sequence E32

NIKON

TECHNICAL INFORMATION

AFS

Product Name: Nikon FA (FAA16001/FAA16051)

Ref. No. FA-840007

Modified From:

Date: April 1984

Subject: MIRROR SWITCH MAY BE FAULTILY OPEN

Repair Manual:

It has been reported that Mirror switch B255 may be faultily open and deliver critical fastest speed.

For preventing this trouble, Main FPC B31001 has been modified as shown below.

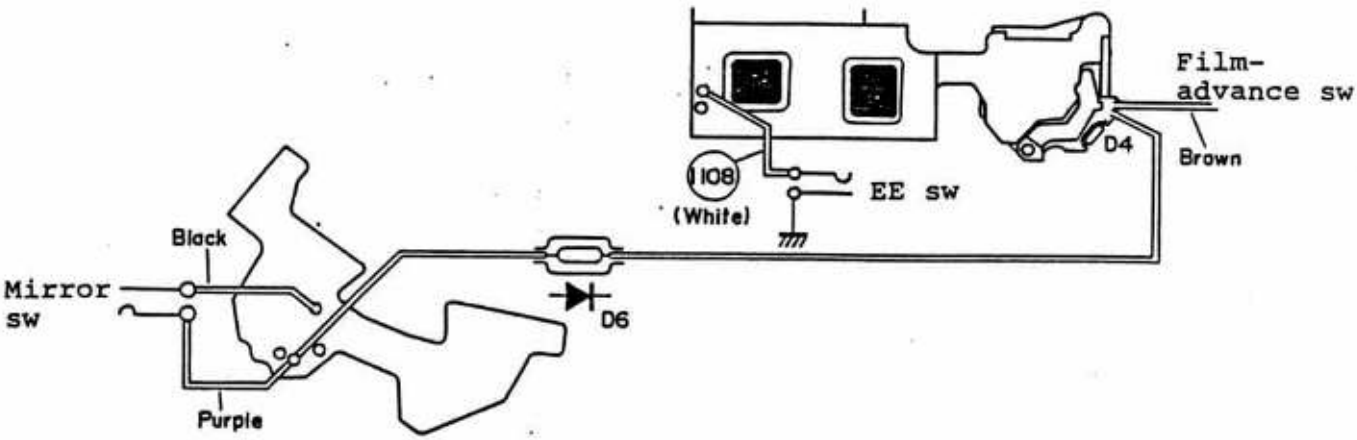

Former main FPC

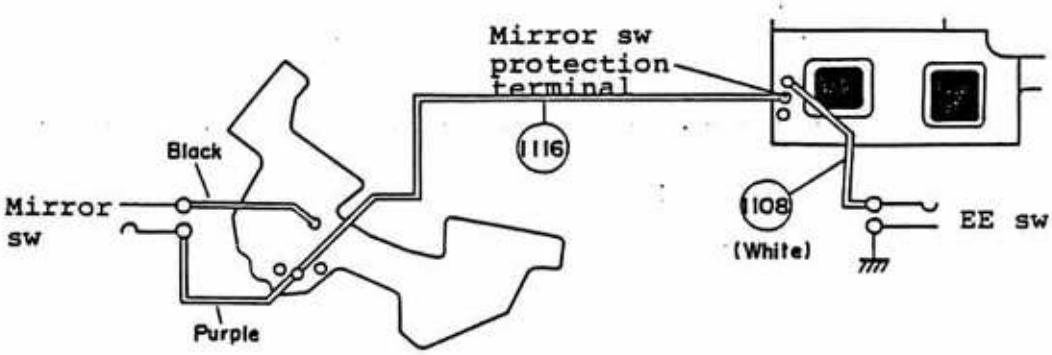

New main FPC

NIPPON KOGAKU K.K.
TECHNICAL & REPAIR SERVICE DEPT.
Fuji Bldg., 2-3, 3-chome, Marunouchi, Chiyoda-ku, Tokyo 100 Japan
Tel. (03) 214-5311. Telex: 02222950 (NIKON J) & J22601 (NIKON)

For service

When a camera is brought for repairs in this matter, replace Mirror switch B255 with new one and adjust it as follows.

Mirror switch adjustment

1) Positioning of mirror switch

Raise the mirror up and use a finger to place it down. Turn #250 to adjust Clearance A for a half of #253's thickness.

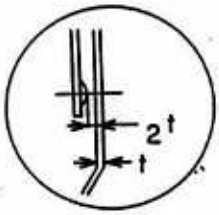

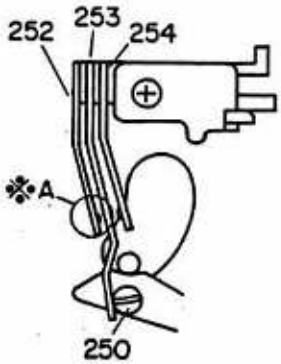

2) Contact pressure of mirror switch

When mirror switch is turned on, pushing #253 toward #254 allow #252 to follow #253 0.1mm or more with keeping its contact.
Bend either #252 or #253 to adjust the contact pressure, if necessary.

Be sure to check ON/OFF of mirror switch and DB switch #254.

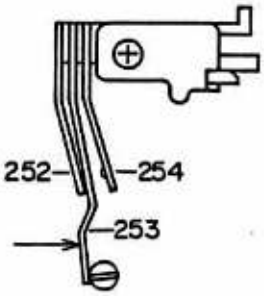

3) Mirror switch cementing

Apply Adhesive #350 to the bottom of mirror switch as well as the screw head.

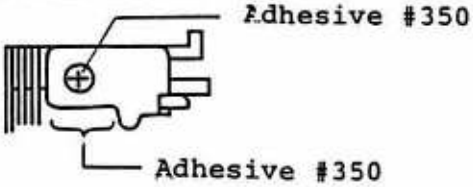

NIPPON KOGAKU K.K.

Fuji Bldg., 2-3, 3-chome, Marunouchi, Chiyoda-ku, Tokyo 100 Japan
Tel. (03) 214-5311. Telex: 02222950 (NIKON J) & J22601 (NIKON)
Cable: NIKKO TOKYO

4) Wave form checking

Use an oscilloscope to check the wave form of mirror switch.

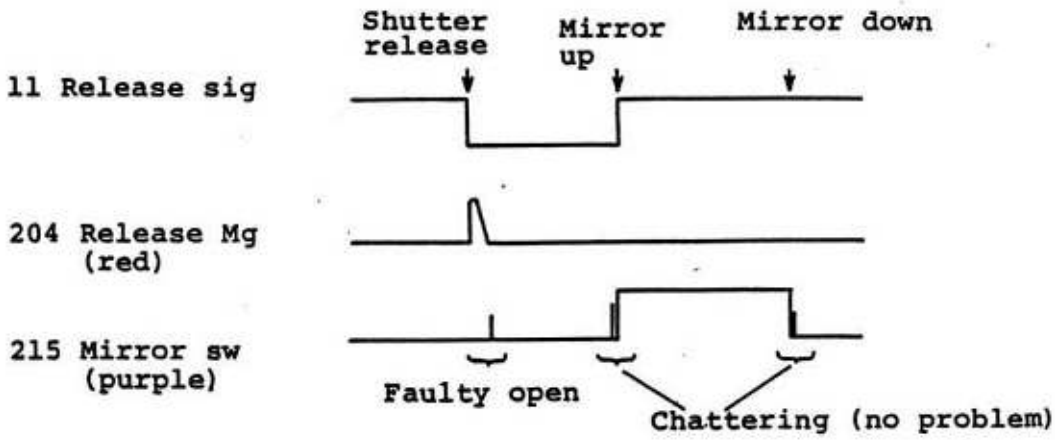

Trigger Land 11 or Land 204 to see the wave form of Land 215.
Refer the locations of checking lands to the repair manual p.E16.
Release shutter so many times as to check that the wave form is free from the faulty open of mirror switch.

Even if the trouble reccurs after replacement of mirror switch, replace Main FPC B31001 with new one.

NIPPON KOGAKU K.K.

Fuji Bldg., 2-3, 3-chome, Marunouchi, Chiyoda-ku, Tokyo 100 Japan
Tel. (03) 214-5311. Telex: 02222950 (NIKON J) & J22601 (NIKON)
Cable: NIKKO TOKYO

CAMERA OPERATION BLOCK DIAGRAM

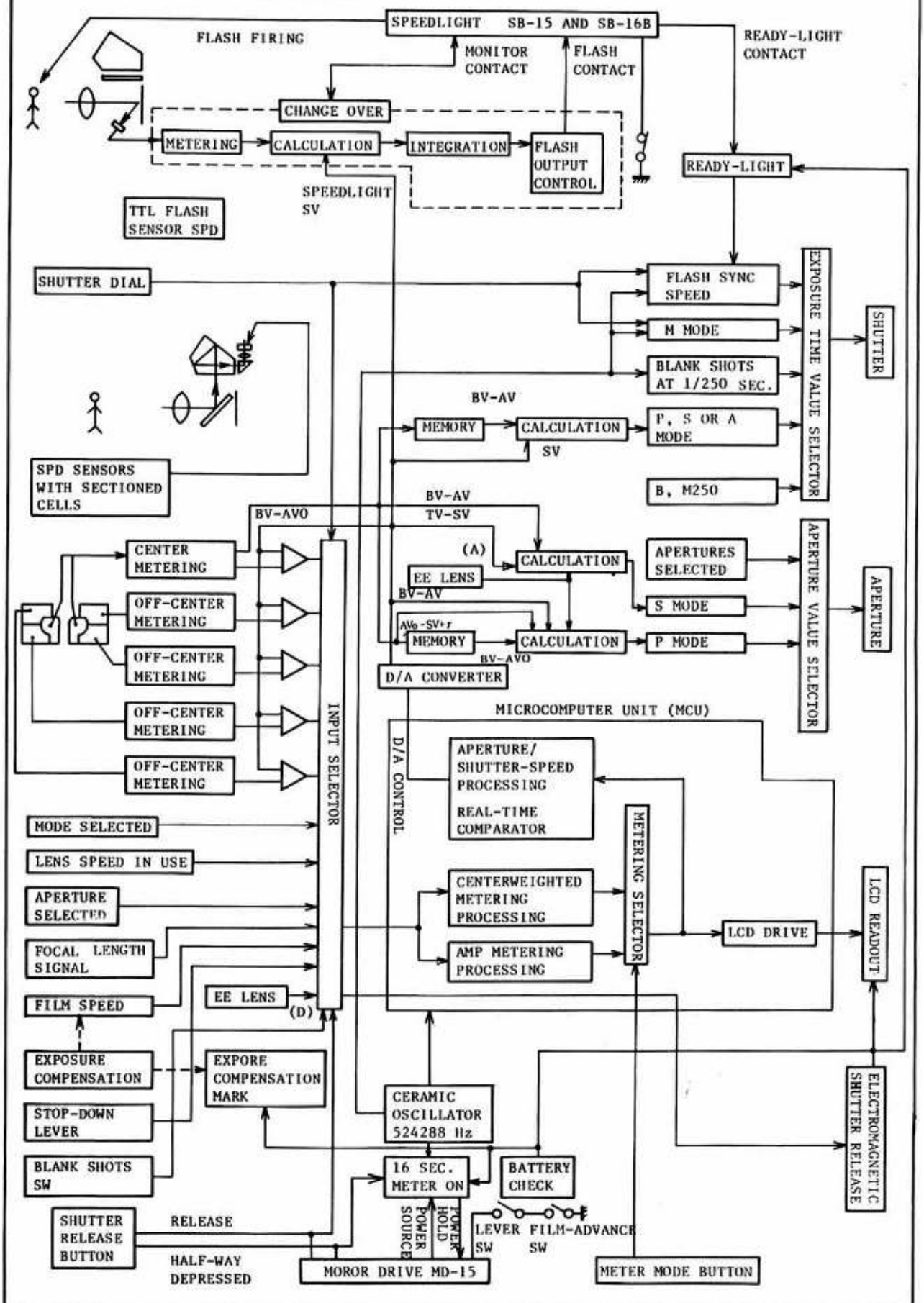

CIRCUIT OPERATION OUTLINE

The basic circuit formation of the FA is similar to that of the FG, but the introduction of the automatic multi-pattern metering (MAP) has added some features induding A/D converter, or microcomputer unit (MCU) as the digital data processing devices.

1. Exposure data input block

1) Metering data input

This block is devided into the automatic multi-pattern metering (AMP) and aperture/shutter-speed control.
For the AMP, it is necessary to input the five brightness analog values from the SPDs into the MCU with the help of D/A converter and the five comparators.
For aperture/shutter-speed control, only the brightness value of center area is utilized.

2) Other data input

The following exposure data of digital amount as the gray code are inputted into the MCU via the input selector.

Mode selected: 2-bit Shutter dial: 4-bit

Lens speed in use: 4-bit

Aperture selected: 2-bit

Focal length signal: 2-bit

EE lens signal: 1-bit

Film speed: 5-bit

Stop-down lever: 1-bit

Turning exposure compensation switch on makes exposure compensation LED light up and the compensated film speed is inputted into the MCU.

2. DIGITAL DATA PROCESSING

The exposure data are processed in the MCU with the control of the clock of ceramic oscillator 524 kHz (= 219).

1) Correct exposure value

Correct exposure value is obtained for the AMP as BVans and for the center-weighted metering as BVO.

2) LCD readout

LCD readout value is processed for the different mode selected and outputted at terminals 00 - 07 to drive LCD panel.

3) D/A conversion

Correct exposure value of digital is converted into a value of analog in the D/A converter and utilized for shutter speed and aperture opening control.

a) While metering

The correct exposure value (BV) is being compared with the brightness value (AVO) on a real-time basis. The MCU verifies and determines the correct exposure value (BV-AVO) to be equal to the real brightness value.

b) After shutter release

On P and S modes, the aperture control value determined by the MCU is converted into an analog value.

c) After mirror rising

On A, S and P modes, the shutter speed control value determined by the MCU is converted into an analog value. The TTL flash control value is provided when ready-light lights up. Aperture and shutter speed control depends on the central brightness value, but also takes account of off-center brightness values by shifting the film speed value.

3. APERTURE AND SHUTTER SPEED CONTROL

The aperture and shutter speed control of the FA is regarded as the same type of the FG added the aperture control on S mode.

1) Aperture control

a) Aperture control on S mode

Aperture will be stopped down to the following condition:

$(BV-AV) = (TV-SV)$ BV - AV: Central brightness value

$BV + SV = TV + AV$ TV - SV: Shutter speed value

b) Aperture control on P mode

Aperture will be stopped down to the following condition:

$(BV-AV) = -(BV-AV) + (AVO-SV+\alpha) + (BV-AVO)$

$AV = \frac{1}{2}(BV+SV) - \frac{\alpha}{2}$ (aperture value)

$TV = \frac{1}{2}(BV+SV) - \frac{\alpha}{2}$ (shutter speed value)

BV - AV: Central brightness value

BV - AVO: Correct exposure value (Program memory)

AVO - SV $+\alpha$: Aperture value

When lenses of 135mm or longer are used or teleconverters are attached, α increases up to 5 and the high-speed program mode is activated. Otherwise, α remains 2 and the normal program mode works; is the same program the FG has incorporated. The focal length of a lens used is detected as Fmm signal via the position of notch of lens.

c) Aperture control on A and M modes

Aperture is stopped down to the selected value on A and M modes, or when i) the ready-light lights up, ii) the stop-down switch is closed, iii) the blank-shots switch is closed.

2) Shutter speed control on A, S and P modes

There is no operative difference between the three modes after shutter speed will be determined as follows.

$(BV-AV) + (-SV) \equiv TV$
BV - AV: Central brightness value
- SV: AMP value

3) Flash output control on TTL mode

Monitor contact of speedlight SB-15/16 transmits TTL mode signal to the camera.
The outputs of TTL flash senser circuit and speedlight SV are calculated to be utilized for the flash output control.

4. DIGITAL SHUTTER SPEED CONTROL

Shutter speed is controlled by clock of 524.288 kHz in ceramic oscillator.

1) Shutter speed control on M mode

13 shutter speeds from 1/4000 to 1 sec. are controlled digitally.

2) Flash sync speed

Flash sync shutter speed is controlled when ready-light lights up.

a) A, S or P mode

To be controlled at 1/250 sec.

b) M mode

1/500 - 1/4000 sec.: To be controlled at 1/250 sec.
1 - 1/250 sec.: To be the shutter speed in use.

3) Blank shots shutter speed control

While the blank shots switch is closed (before frame counter reaches "1"), shutter speed is controlled at 1/250 sec. regardless of the mode selection.

5. BATTERY CHECK/16 SEC. METER ON

1) 16 sec.-meter hold

a) 16 sec. hold

Power switch is turned on by first stroke of shutter release button when power voltage is approx. 2.45V or more, power stays on for 16 sec. after finger is lifted off button, also it stays on for 16 sec. after mirror down.

b) Instant hold

When power voltage is approx. 2.44V or less, power stays on only for approx. 0.2 sec. to warn low battery power.

2) Viewfinder display/release lock

When power voltage is approx. 2.3V or less, LCD readout and LED displays (ready-light, exposure compensation) are turned out, and electromagnetic shutter release is locked.
Ready-light LED can light up when shutter speed dial is set at B or M250.

6. ELECTROMAGNETIC SHUTTER RELEASE

Release switch is turned on by second stroke of shutter release button, and release signal is generated to initiate release sequence.
Release signal is put into Input selector and the MCU provides a signal to charge magnet of electromagnetic release.
It is followed by the mechanical shutter release sequence.
When shutter release button is fully depressed, release signal is generated after exposure value processing.

7. MOTOR DRIVE CONNECTION

Motor drives MD-15 and MD-12 are usable.
MD power switch and MD film-advance switch are used by both the MD-15 and the MD-12. Battery power is supplied from the MD-15 and power hold of the MD-15 is controlled by the FA.
The camera's release switch is electrically connected to the MD-15.
The second release switch for the MD-12 is turned on by the stroke of MD-12's shutter release pin.

AUTOMATIC MULTI-PATTERN METERING (AMP) OUTLINE

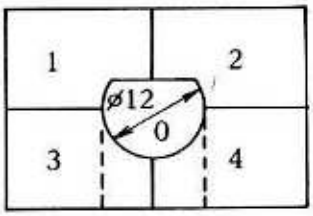

a) AMP metering mode

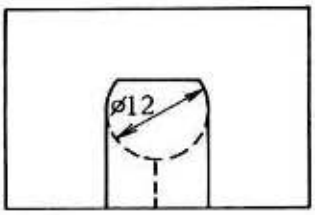

b) Centerweighted metering mode

Two SPD sensors with sectioned cells are used and the picture frame is divided into five segments (4 off-center areas and center area).

1. Five segmental outputs are logarithmically compressed (PV0-PV4).

2. Signals PV0 - PV4 are compensated for lens speed in use (BV0-BV4).

3. Signals BV0 - BV4 are processed to meet with one of the selective exposure patterns BV0, BH, BM and BL. Then the selected pattern signal is fed as BVans.

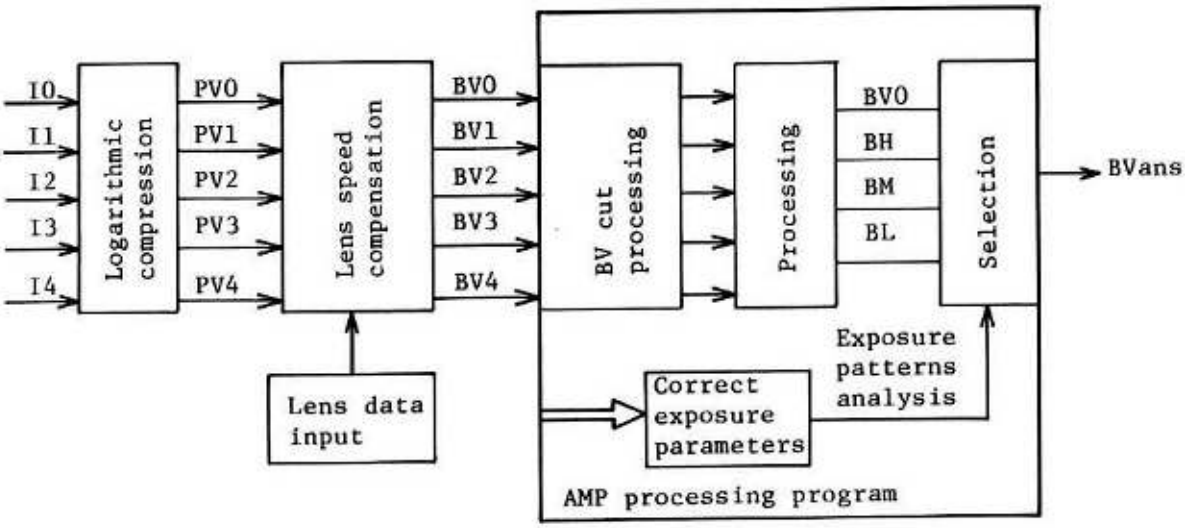

BV0: Centerweighted exposure pattern

BH: High-light zone weighted exposure pattern.

BM: Averaging exposure pattern

BL: Low-light zone weighted exposure pattern.

Lens speed compensation program

This program processes the five segmental SPD outputs to be fit for the real exposing condition on the film plane.
Since the SPD outputs of off-center areas are subject to the effect of vignetting, they are compensated by the fo signal fed according to type of lens in use.
Thus, when a lens in use can not feed fo signal to the camera body, the AMP is not operated.

AMP processing program

This program processes the five segmental SPD outputs and determine the correct exposure value.
The SPD output of higher than EV 16 $^{1}/_{3}$ (ASA/ISO 100) will be removed.

When the following conditions are fulfilled, the AMP is operated.

1. Meter mode switch is off.

2. Blank shots switch is off.

3. Stop-down switch is off.

4. Ready-light terminal is off.

5. P, S or A mode is selected.

6. fo signal is fed.

CIRCUITRY ARCHITECTURE

The FA's circuitry contains eight FPCs, six ICs, sixteen resistors twenty-seven condensers, three diodes and one ceramic oscillator.

F P C	I C	
1. Main FPC	1. Head amplifier	
2. ASA dial/LCD viewfinder information FPC (ASA/LCD FPC)	2. Mode selecter	Analog HIC
	3. D/A converter	
3. fo FPC	4. Digital IC	Digital HIC
4. f-fo FPC	5. Microcomputer	
5. Film-advance lever unit FPC	6. LCD driver	
6. Shutter dial FPC	IC 1-5 are mounted on Main FPC.	
7. Shutter control FPC	IC 6 is mounted on ASA dial/LCD viewfinder information FPC.	
8. Shoe contact FPC.		

Head amplifier: Five head amprifiers for metering and one head amplifier for TTL flash output are provided to control shutter speed and flash output.

Mode selecter: To realize the multi-mode operation, mode changeover circuit and aperture control circuit are provided.

D/A converter: To realize high rate analog-to-digital conversion, 6-bit D/A converter is provided.
D/A converter is controlled by the MCU to execute high-rate sequential comparison.

Digital IC: It feeds operation timing control on manual mode and various input data into the MCU as a multiplexer function.

Microcomputer: A brain to realize the AMP and multi-mode operation. It controls the other five ICs with a 524 kHz high-rate processing.

LCD driver: It drives LCD readout by the display output signals of MCU.

Analog HIC: Analog control circuit module composed of mode selecter and D/A converter ICs bonded onto a ceramic board.

Digital HIC: Digital control/computation module composed of digital IC and microcomputer chip bonded onto a glass-epoxy resin plate.

Ceramic oscillator: To operate the MCU at high rate, a compact oscillator of higher capacity is used.

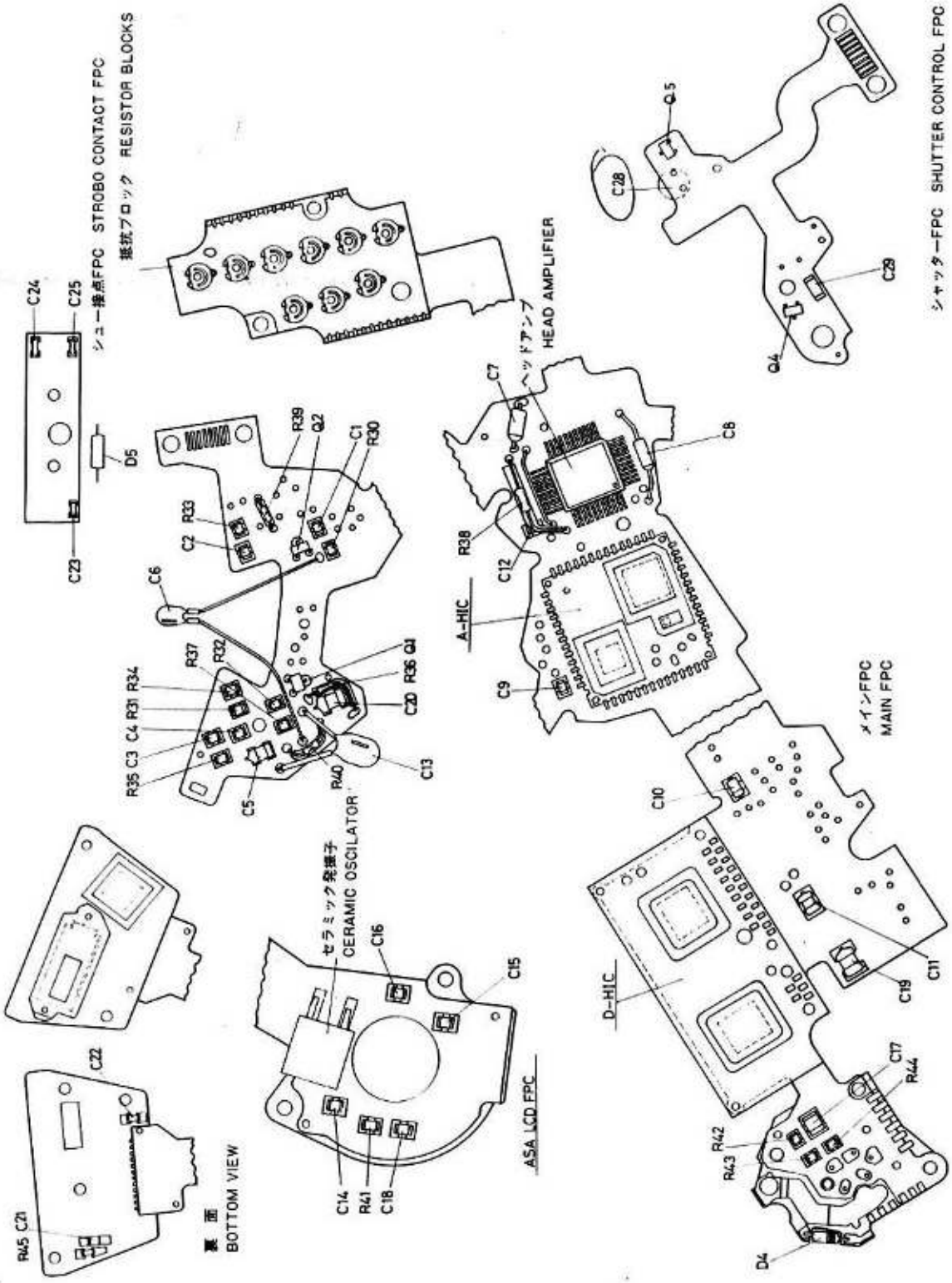
シュー接点FPC STROBO CONTACT FPC
抵抗ブロック RESISTOR BLOCKS
シャッターFPC SHUTTER CONTROL FPC
ヘッドアンプ HEAD AMPLIFIER
A-HIC
メインFPC MAIN FPC
D-HIC
セラミック発振子 CERAMIC OSCILATOR
ASA LCD FPC
裏面 BOTTOM VIEW
C24
C25
C23
D5
R39
Q2
C1
R30
R33
C2
C6
R37
R32
R34
R31
C4
R35
C3
C5
R40
Q1
R36
C20
C13
C7
C8
R38
C12
C9
Q5
C28
C29
Q4
C10
C11
C19
C16
C15
C14
R41
C18
C22
R45
C21
C17
R44
R42
R43
D4

CIRCUITRY PARTS LIST

Index		Function	Index		Function
C1	560 P	Latch release	R30	150 K	Latch release
C2	0.022 μ	Flash output control latch release	R31	100 K	Latch release
C3	0.01 μ	Flash output control integration	R32	330 K	Latch release
C4	0.022 μ	Integration start timing	R33	150 K	Flash output control latch release
C5	1.0 μ	Timer condenser	R34	1 K	Flash output control integration
C6	2.2 μ	Memory condenser	R35	270 K	Integration start timing
C7	1.0 μ	Noise filter	R36	1 K	Firing stop sig
C8	0.1 μ	Noise filter	R37	180	Timer
C9	0.15 μ	Power-off	R38	1 K	Noise timer
C10.	0.15 μ	Differentiation	R39	390	Release Mg
C11	3.3 μ	Program memory	R40	390	Aperture Mg
C12	47 P	Phase compensation	R41	820 K	* Power-on reset
C13	82 μ	Aperture Mg - C	R42	820 K	Release differentiation
C14	0.056 μ	* Power-on reset	R43	100 K	Release pull-up
C15	100 P	* Ceramic oscillation	R44	1 K	HD power hold
C16	100 P	* Ceramic oscillation	R45	2 M	* Discharge
C17	0.12 μ	Release differentiation			
C18	0.15 μ	* Power source condenser			
C19	10 μ	Power source condenser			
C20	10 μ	Power source condenser			
C21	0.047 μ	* Rectification			
C22	0.15 μ	* Oscillation			
C23	0.01 μ	Noise reduction			
C24	0.01 μ	Noise reduction	Q1		Aperture Mg
C25	2200 P	Noise reduction	Q2		Latch release
C28	82 μ	Aperture Mg	Q3		Power supply
C29	0.033 μ	Shutter Mg	Q4		Shutter Mg
			Q5		Release Mg

* Located on ASA/LCD FPC

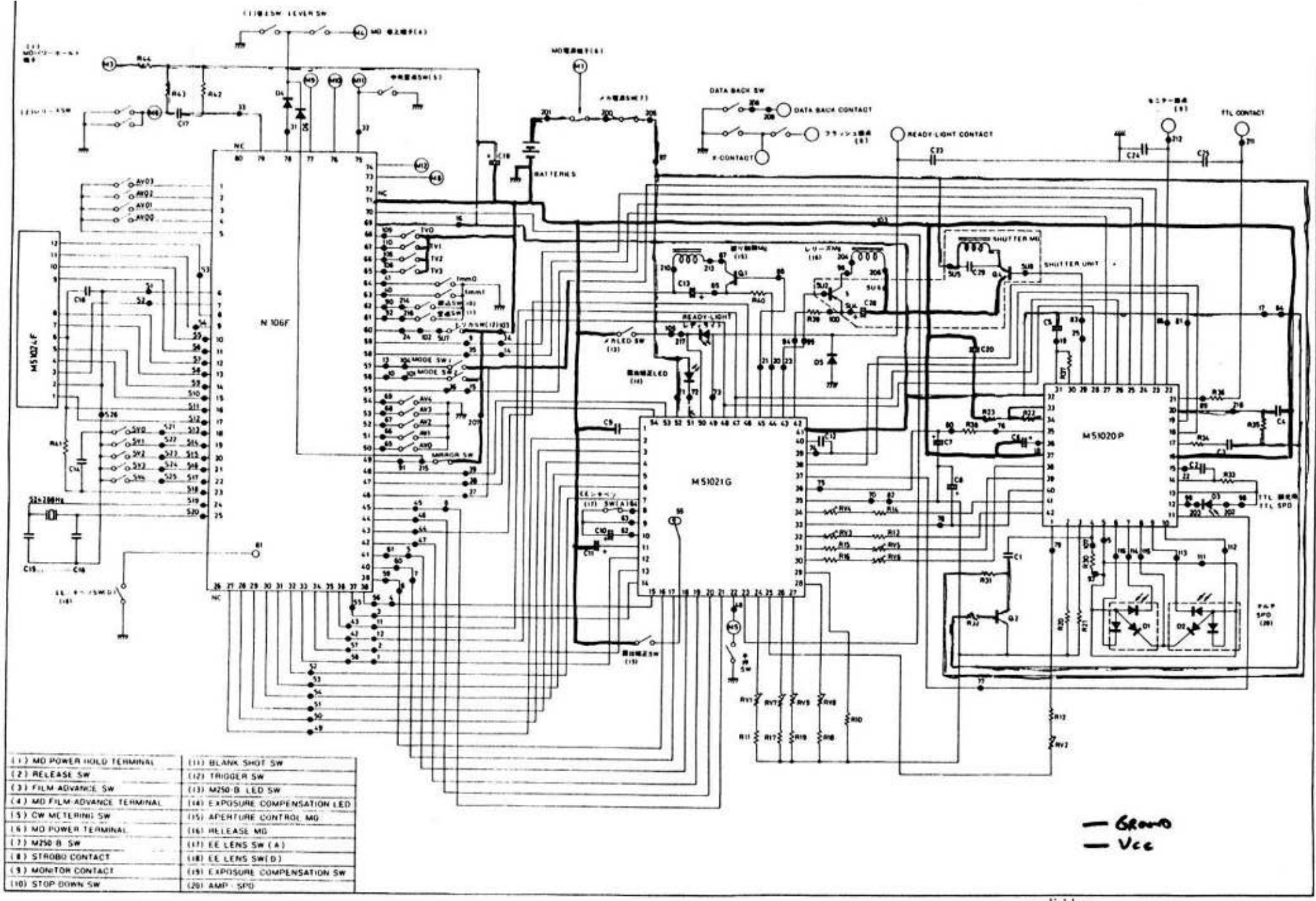

(1) MD POWER HOLD TERMINAL	(11) BLANK SHOT SW
(2) RELEASE SW	(12) TRIGGER SW
(3) FILM ADVANCE SW	(13) M250-B LED SW
(4) MD FILM ADVANCE TERMINAL	(14) EXPOSURE COMPENSATION LED
(5) CW METERING SW	(15) APERTURE CONTROL MG
(6) MD POWER TERMINAL	(16) RELEASE MG
(7) M250-B SW	(17) EE LENS SW (A)
(8) STROBO CONTACT	(18) EE LENS SW (D)
(9) MONITOR CONTACT	(19) EXPOSURE COMPENSATION SW
(10) STOP DOWN SW	(20) AMP · SPD

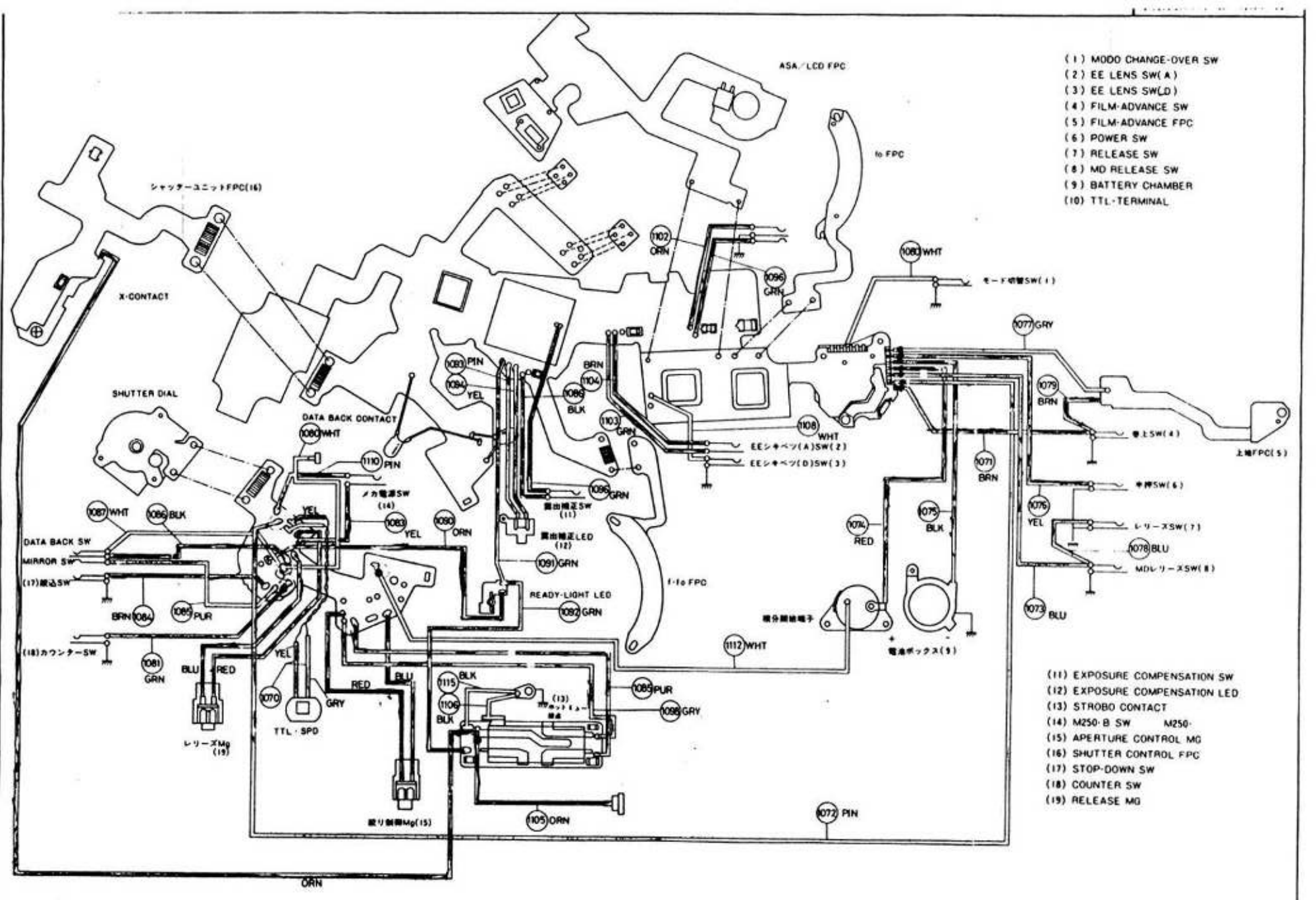
(1) MODO CHANGE-OVER SW
(2) EE LENS SW(A)
(3) EE LENS SW(D)
(4) FILM-ADVANCE SW
(5) FILM-ADVANCE FPC
(6) POWER SW
(7) RELEASE SW
(8) MD RELEASE SW
(9) BATTERY CHAMBER
(10) TTL-TERMINAL
(11) EXPOSURE COMPENSATION SW
(12) EXPOSURE COMPENSATION LED
(13) STROBO CONTACT
(14) M250-B SW M250-
(15) APERTURE CONTROL MG
(16) SHUTTER CONTROL FPC
(17) STOP-DOWN SW
(18) COUNTER SW
(19) RELEASE MG
ASA/LCD FPC
to FPC
シャッターユニットFPC(16)
X-CONTACT
SHUTTER DIAL
DATA BACK CONTACT
DATA BACK SW
MIRROR SW
(17)絞込SW
(18)カウンターSW
メカ電源SW (14)
露出補正SW (11)
露出補正LED (12)
READY-LIGHT LED
EEシキベツ(A)SW(2)
EEシキベツ(D)SW(3)
モード切替SW(1)
巻上SW(4)
上蓋FPC(5)
巻戻SW(6)
レリーズSW(7)
MDレリーズSW(8)
電池ボックス(9)
レリーズMg (19)
TTL・SPD
絞り制御Mg(15)
1-16 FPC
1102 ORN
1096 GRN
1080 WHT
1077 GRY
1079 BRN
1083 PIN
1084 YEL
1086 BLK
1104 BRN
1103 GRN
1108 WHT
1110 PIN
1087 WHT
1085 BLK
1083 YEL
1090 ORN
1091 GRN
1092 GRN
1084 BRN
1085 PUR
1081 GRN
1070 YEL
1071 BRN
1076 YEL
1075 BLK
1074 RED
1078 BLU
1073 BLU
1112 WHT
1115 BLK
1109 BLK
1089 PUR
1098 GRY
1105 ORN
1072 PIN
ORN

SWITCHES

Name	Location	Type	Function
Main sw Release sw power sw	Release plate	Slide switch (3)	It starts metering/LCD readout when shutter release button halfway depressed. It turns release Mg off and raises mirror when shutter release button fully depressed.
Counter sw	Film-advance lever unit	Contact spring	Counter sw turns on to control shutter speed at 1/250 sec. in all modes before frame counter reaches "1". LCD readout shows C250 or MC250. Counter sw turns off when counter advances "1" or more, and LCD readout shows the shutter speed in use.
Shutter dial brush	Shutter dial	Slide brush (5) Gray code	By turning shutter dial, shutter dial brush senses the signal of shutter speed in use.
Power on/off sw	Shutter dial	Slide sw (2)	By turning shutter dial, the metering LCD readout, and power hold circuit are turned off at M1/250 or B.
Mode changeover brush	Shutter dial	Slide brush (3) Gray code	By turning mode changeover lever, it senses the mode P/S/A/M selected.
Mirror sw	Mirror cage Base plate I	Contact spring	It turns off directly before mirror rising to stop metering, and turns on after mirror down.
Data back sw	Mirror cage Base plate I	Contact spring	It turns on mirror rising to provide the data back with trigger signal, and turns off after mirror down.
Stop-down sw	Front plate	Slide sw (2)	It turns on by pressing stop-down lever. P and S modes are changed to A mode. On A and M modes, stopped down metering is activated.
Meter mode sw	Front plate	Contact spring	By pressing meter mode button, center weighted metering is activated in all modes.
EE lens sw	Front plate	Contact spring	By mounting a lens except AI or AI-S type, lens type signal pin on bayonet is pressed to change aperture control timing (analog) and compensate the lens speed (digital).
fo brush	Lower front plate	Slide brush (6) Gray code	By mounting a lens of AI or AI-S type, it senses the lens speed. When a modified AI lens is mounted, the lens speed is regarded as F2.8 and center-weighted metering is activated.
f-fo brush	Aperture coupling ring ring	Slide brush (6) Gray code	Turning aperture ring enables f-fo brush to sense the aperture value. (1/3 f/stop gradation)
ASA brush	ASA unit	Slide brush (6)	Turning ASA dial enables to ASA brush to sense the film speed. (1/3 EV gradation)

Name	Location	Type	Function
Focal length (Fmm) signal sw	Mirror cage L	Slide sw (2)	It senses Fmm signal and: 1. Shifts the program to the high-speed when lenses of 135mm or larger, or AI-S type teleconverters are used. 2. Compensates the lens speed when AI-S type teleconverters are used.
Exposure compensation sw	ASA unit	Slide sw (2)	It turns on by setting exposure compensation and exposure compensation LCD lights up.
Closing curtain sw	Bottom body	Contact spring	It turns on after releasing shutter and makes motor drive advance the film while lever sw is on.
MD release sw	Bottom body	Contact spring	It turns on by the shutter release pin of the MD-11/12, and generates release signal to perform electromagnetic release.
MD connector	Bottom body	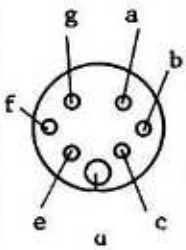	a: Power on sig (Power hold starts when low) b: Release sig (Shutter is released when low) c, e: GND d: MD power supply f: 16 sec. hold sig g: Film-advance sig
Shoe contact	Top cover	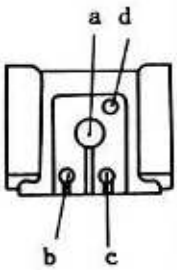	a: Sync contact X-contact on enables the flash to fire. b: Ready-light contact Shutter speed is automatically set at 1/250 sec. on P, S and A modes and also is set at 1/250 sec. when Shutter dial is set between 500 and 400 on M mode. c: TTL flash output control contact Stops the flash firing when the flash output provides the right amount of light. d: Monitor contact
Trigger sw	Shutter		It turns on by shutter charge and off by shutter release.
X-contact	Shutter		It turns on by opening curtain travel completion and off by closing curtain travel completion.

31	Film-advance sw	49	B_5	62	R_5 terminal	△ 70	GND	* 75	Differentiation input	* 80	Noise filter mid point
32	S I	50	B_4	* 63	Differentiation C	* 71	Vcc 1	* 76	Metering output	81	Bch reference voltage
33	Release input	51	B_3	64	Differentiation change over	* 72	Exposure compensation LED	77	237 mV	* 82	GND
34	Trigger sig	52	B_0	65	$(AV-AVo)_0$	* 73	Ready-light	* 78	C_5 in	83	Shutter Mg Tr-B
35	A-M change over	53	B_1	66	$(AV-AVo)_1$	74	SV (DA output)	79	A/D temperature compensation		
36	M-TIME	54	B_2	67	$(AV-AVo)_2$						
37	ASA warning	55	C_7 out	68	$(AV-AVo)_3$						
38	Bch 1	56	C_6 out	69	$(AV-AVo)_4$						
39	Bch 2	57	Mode A sig A								
* 40	Fmm 1	58	Mode B sig B								
* 41	Fmm 0	59	C_5 out								
42	Mirror sig	60	C_4 out								
43	Release sig	61	C_3 out								
44	Charge sig										
45	Power hold										
46	Speed light sig										
47	Power sig										
48	Power sw										

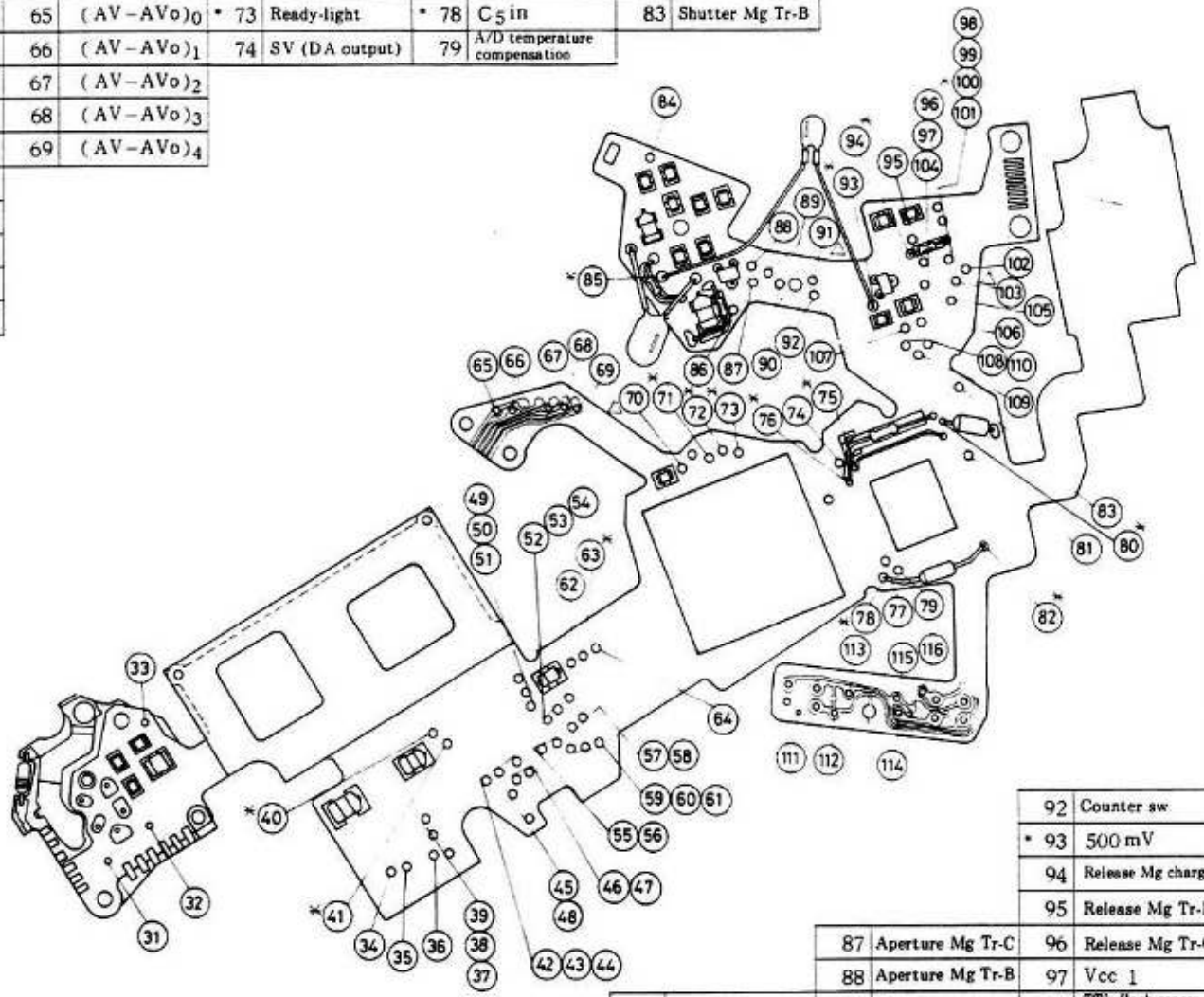

						101	Mode sw
						102	Trigger sw
						△103	GND
						104	Mode sw 1
						105	Mechanical release LED
						106	TV 3
						107	Latch release ④
				92	Counter sw	108	TV 2
				* 93	500 mV	109	TV 0
				94	Release Mg charge	110	TV 1
				95	Release Mg Tr-B	111	500 mV
		87	Aperture Mg Tr-C	96	Release Mg Tr-C	112	A_5 in
		88	Aperture Mg Tr-B	97	Vcc 1	113	A_4 in
84	Vcc 2	89	Stop sig	98	TTL flash sensor SPD (A)	114	A_2 in
* 85	Aperture Mg Tr-E	90	Stop-down sw	99	TTL flash sensor SPD (K)	115	A_3 in
86	Speed light	△ 91	Mirror sw	100	Release Mg Tr-E	116	A_1 in

△ Useless solder joint

* Lead wire soldering terminal

200～218 are lead wire soldering terminals.

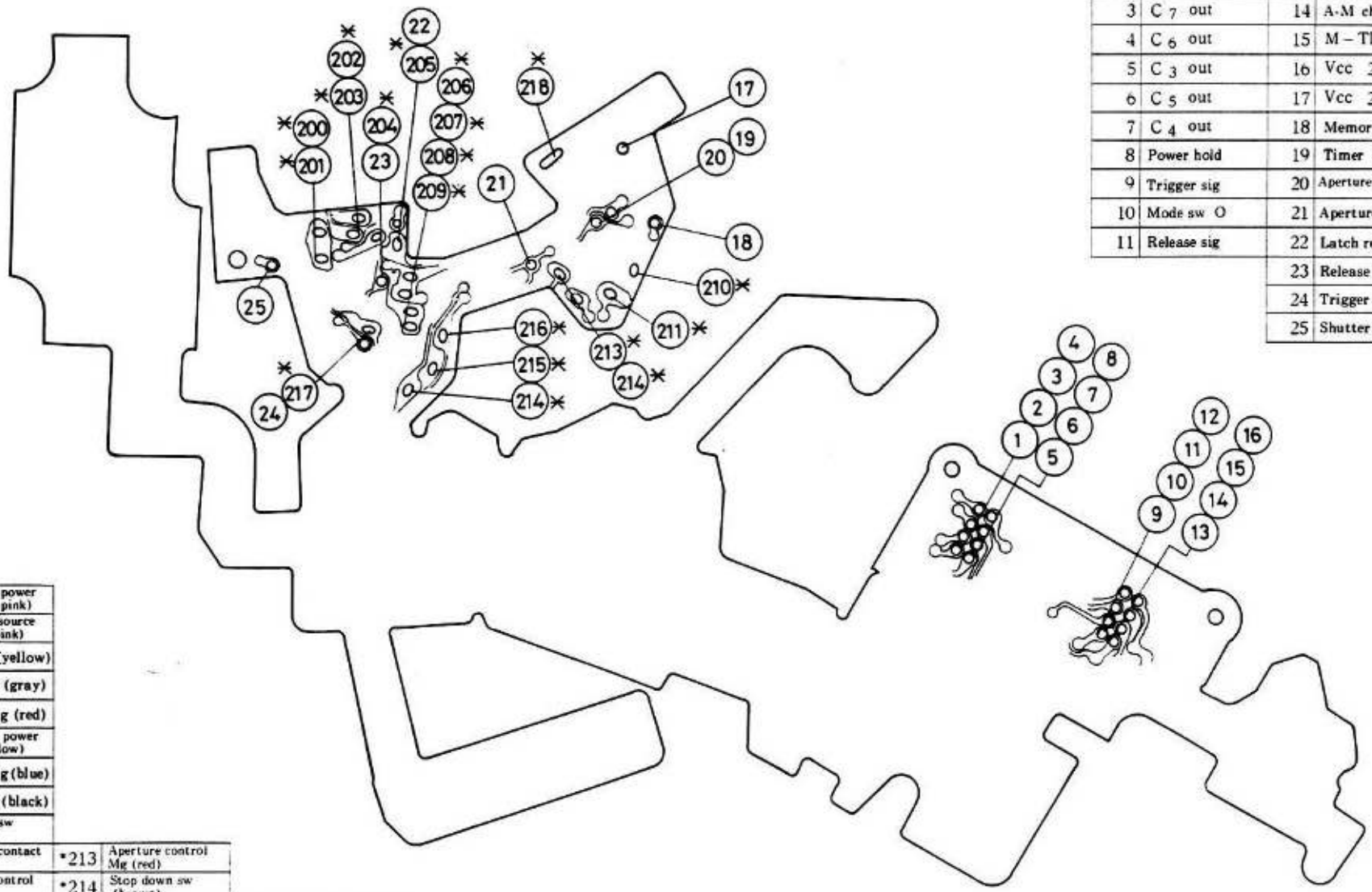

1	Mode sig B	12	Mirror sig
2	Mode sig A	13	Mode sw 1
3	C 7 out	14	A-M change over
4	C 6 out	15	M – TIME
5	C 3 out	16	Vcc 2
6	C 5 out	17	Vcc 2
7	C 4 out	18	Memory C
8	Power hold	19	Timer C
9	Trigger sig	20	Aperture Mg charge
10	Mode sw O	21	Aperture Mg Tr-B
11	Release sig	22	Latch release ⑮
		23	Release Mg Tr-B
		24	Trigger sw
		25	Shutter Mg Tr-B

*200	Mechanical power source sw (pink)				
*201	MD power source terminal (pink)				
*202	TTL SPD (yellow)				
*203	TTL SPD (gray)				
*204	Release Mg (red)				
*205	Mechanical power source (yellow)				
*206	Release Mg (blue)				
*207	Mirror sw (black)				
*208	Data back sw (white)				
*209	Data back contact (white)	*213	Aperture control Mg (red)		
*210	Aperture control Mg (blue)	*214	Stop down sw (brown)		
*211	TTL flash output control (purple)	*215	Mirror sw (purple)	*217	Ready-light LED (orange)
*212	Monitor contact (gray)	*216	Blank shots sw (green)	*218	Integration start terminal (white)

CHCKING LANDS (BOTTOM)

FAA16001-R. 31.30. A

HEAD AMPLIFIER TERMINALS

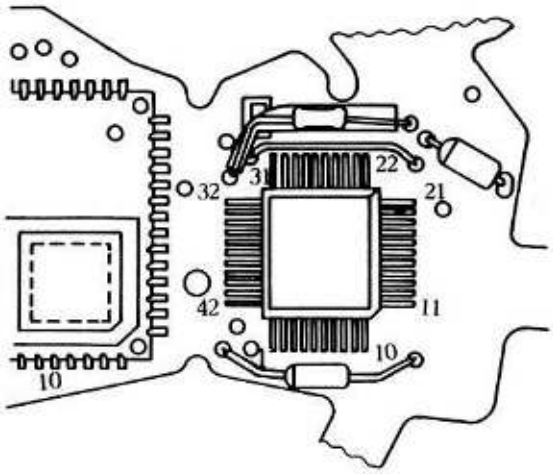

H1	D/A temperature compensation	H22	Speedlight terminal
H2	A3 off-set adjustment (1)	H23	ASA warning signal input
H3	A3 off-set adjustment (2)	H24	Trigger signal input
H4	Latch release	H25	T-TIME input
H5	500 mv bias output	H26	Release signal input
H6	A1 metering input	H27	A - M changeover signal input
H7	A2 metering input	H28	Mirror signal input
H8	A3 metering input	H29	Shutter magnet control output
H9	A4 metering input	H30	Timer condenser discharge
H10	A5 metering input	H31	Timer condenser
H11	237 mv output	H32	Vcc
H12	TTL metering output	H33	γ adjustment (1)
H13	TTL 237 mv bias output	H34	γ adjustment (2)
H14	TTL latch release (1)	H35	Metering output
H15	TTL latch release (2)	H36	Memory condenser
H16	GND	H37	GND
H17	TTL stretch	H38	A5 metering output
H18	SV input	H39	A4 metering output
H19	BCH reference voltage	H40	A3 metering output
H20	Integration start timing	H41	A2 metering output
H21	Firing stop signal	H42	A1 metering output

ANALOG HIC TERMINALS

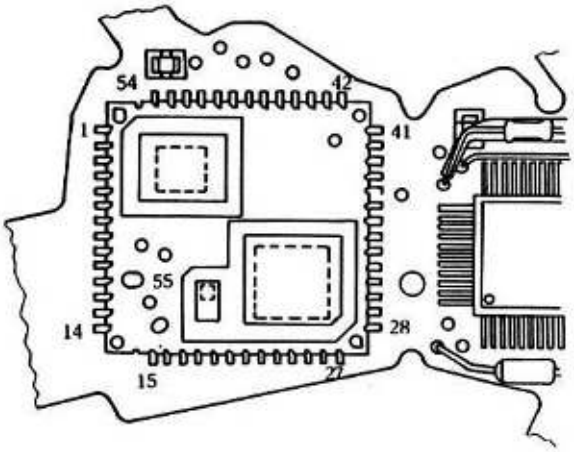

A1	Power-off condenser	A29	R10 terminal
A2	B5 input	A30	C3 input
A3	B4 input	A31	C4 input
A4	B3 input	A32	C7 input
A5	B2 input	A33	C5 input
A6	B1 input	A34	C6 input
A7	B0 input	A35	GND
A8	Differentiation compensation resistor changeover	A36	Lens speed compensation input
A9	Differentiation compensation condenser	A37	Shutter speed ratio reference voltage
A10	R5 terminal	A38	BCH reference voltage
A11	Program memory condenser	A39	DAC current compensation
A12	Mode sig B	A40	Phase compensation condenser
A13	Mode sig A	A41	Vcc 2
A14	C7 output	A42	Release Mg charge
A15	C6 output	A43	Release Mg Tr-B
A16	C5 output	A44	Aperture charge
A17	C4 output	A45	Aperture Mg Tr-B
A18	C3 output	A46	Charge sig
A19	Power sig	A47	Release sig
A20	Speedlight sig	A48	Mirror sig
A21	Power hold sig	A49	Ready-light sig
A22	Power sw	A50	Mechanical shutter control sw
A23	Aperture ENABLE	A51	Exposure compensation LED
A24	S mode level	A52	Vcc 1
A25	ADC level	A53	BCH 2 output
A26	TTL flash output control level	A54	BCH 1 output
A27	A mode level	A55	Exposure compensation sw
A28	P mode level		

DIGITAL HIC TERMINALS

TOP

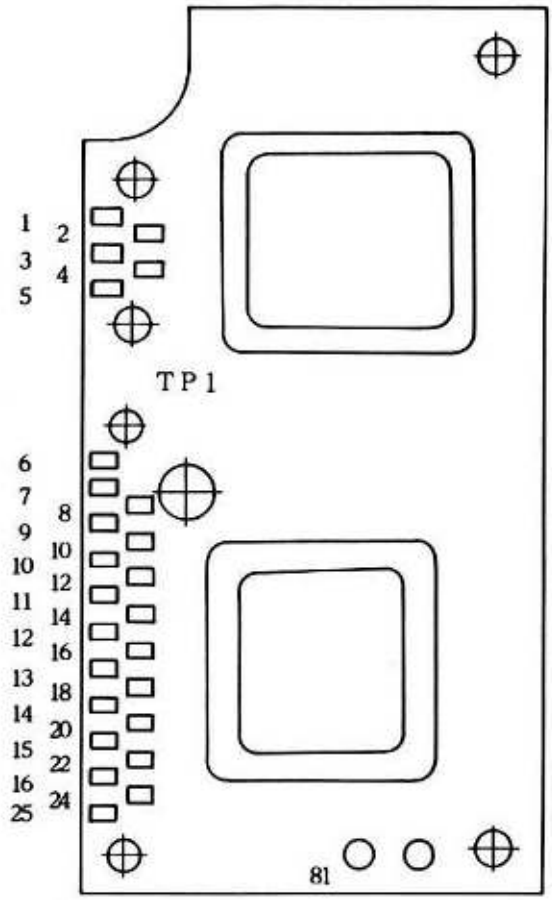

BOTTOM

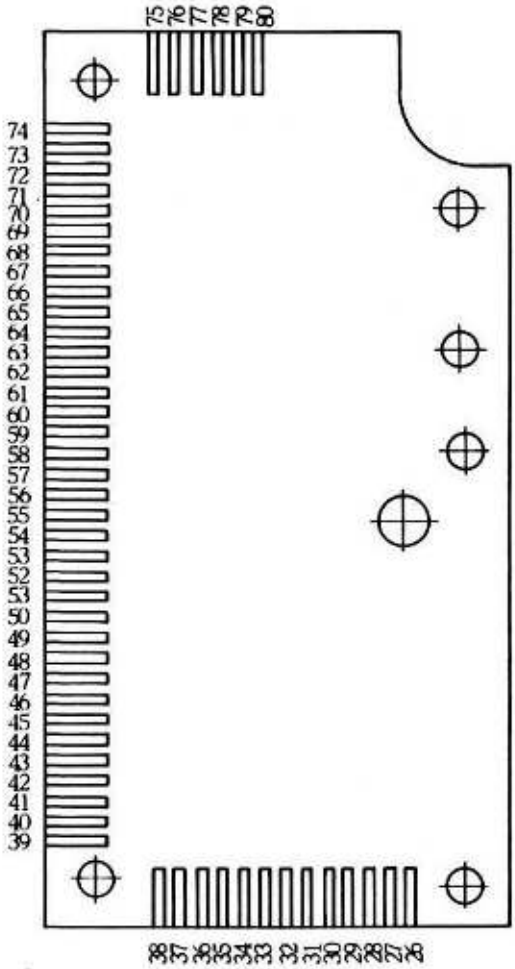

DIGITAL HIC TERMINALS

F1	(AV ϕ IN) 3	F29	B3	F57	(Mode sw) 1
F2	(AV ϕ IN) 2	F30	B2	F58	A-M changeover
F3	(AV ϕ IN) 1	F31	B1	F59	Trigger sig
F4	(AV ϕ IN) 0	F32	B0	F60	Trigger sw
F5	Vss	F33	Mode sig B	F61	Blank shots sw
F6	Vss	F34	Mode sig A	F62	Stop-down sw
F7	BCH 2	F35	Mirror sig	F63	(Fmm) 1
F8	O0	F36	Release sig	F64	(Fmm) ϕ
F9	O1	F37	Off-center 2	F65	(TV IN) 3
F10	O2	F38	Off-center 4	F66	(TV IN) 2
F11	O3	F39	Central	F67	(TV IN) 1
F12	O4	F40	Off-center 1	F68	(TV IN) 0
F13	O5	F41	Off-center 3	F69	VDD
F14	O6	F42	Power sig	F70	Stop-down ENABLE
F15	O7	F43	Charge sig	F71	Vss
F16	VDD	F44	Speedlight sig	F72	NC
F17	$\overline{2048}$	F45	Power hold sig	F73	Verify output
F18	(SV in N) 0	F46	ASA warning sig	F74	SO
F19	(SV in N) 1	F47	BCH 1	F75	SI
F20	(SV in N) 2	F48	BCH 2	F76	$\overline{SC}/\overline{TO}$
F21	(SV in N) 3	F49	Mirror sw	F77	Verify input
F22	(SV in N) 4	F50	(AV-AVO) IN 0	F78	Film-advance sw
F23	Power-on reset	F51	(AV-AVO) IN 1	F79	Release input
F24	EX terminal	F52	(AV-AVO) IN 2	F80	NC
F25	X terminal	F53	(AV-AVO) IN 3	F81	EE/AI
F26	NC	F54	(AV-AVO) IN 4		
F27	B5	F55	M-TIME		
F28	B4	F56	(Mode sw) ϕ		

ASA DIAL/LCD VIEWFINDER INFORMATION FPC TERMINALS

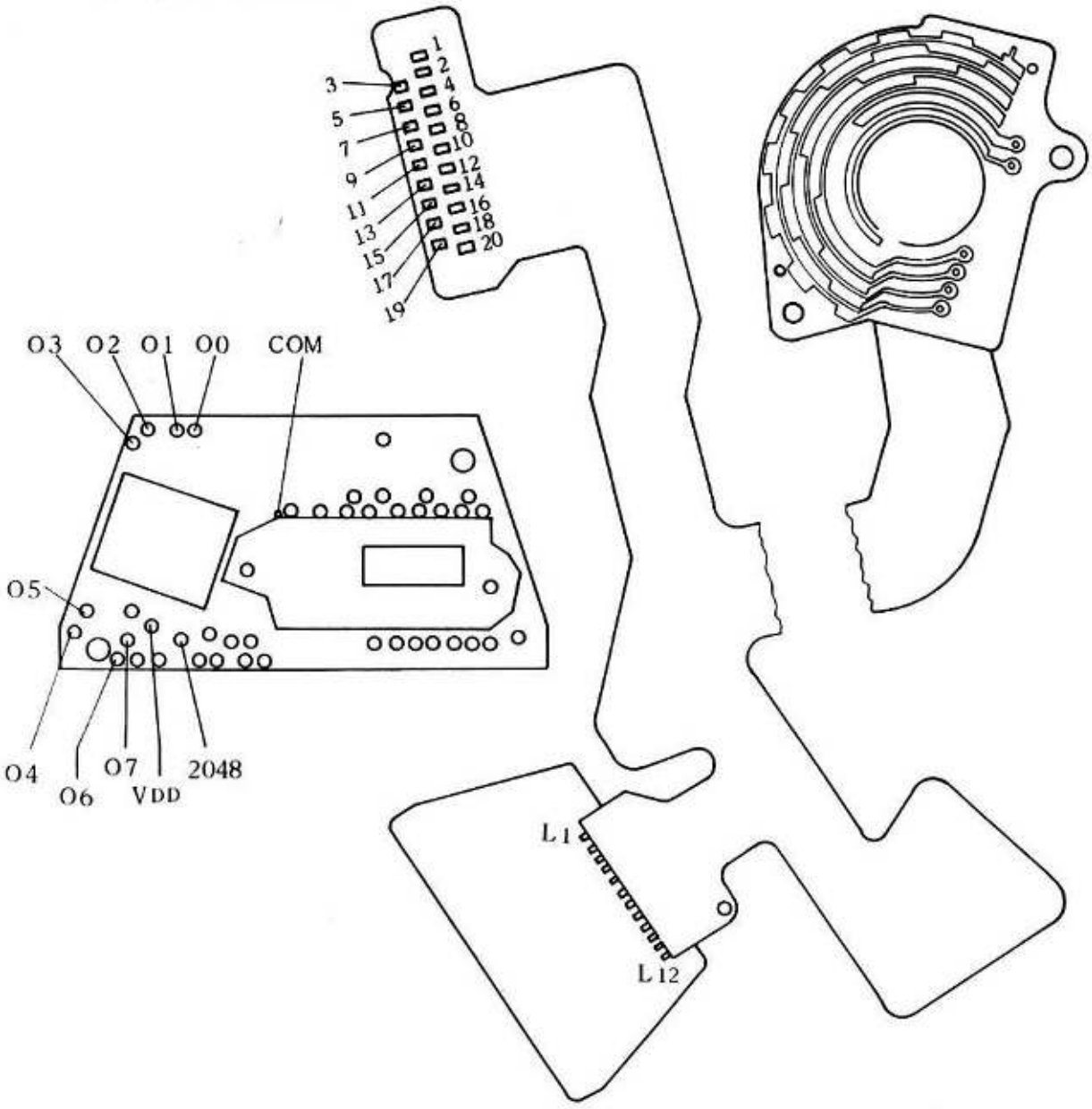

S1	VSS (L2)	S10	O7 (L4)	S19	EX terminal
S2	BCH 2 (L3)	S11	VDD (VCC 2) (L6)	S20	X terminal
S3	O0 (L12)	S12	2048 (L1)	S21	(SV IN) 0
S4	O1 (L11)	S13	(SV IN) 0	S22	(SV IN) 1
S5	O2 (L10)	S14	(SV IN) 1	S23	(SV IN) 2
S6	O3 (L9)	S15	(SV IN) 2	S24	(SV IN) 3
S7	O4 (L8)	S16	(SV IN) 3	S25	(SV IN) 4
S8	O5 (L7)	S17	(SV IN) 4	S26	VSS
S9	O6 (L5)	S18	Power-on reset		

RESISTOR BLOCKS (B1 - B41)

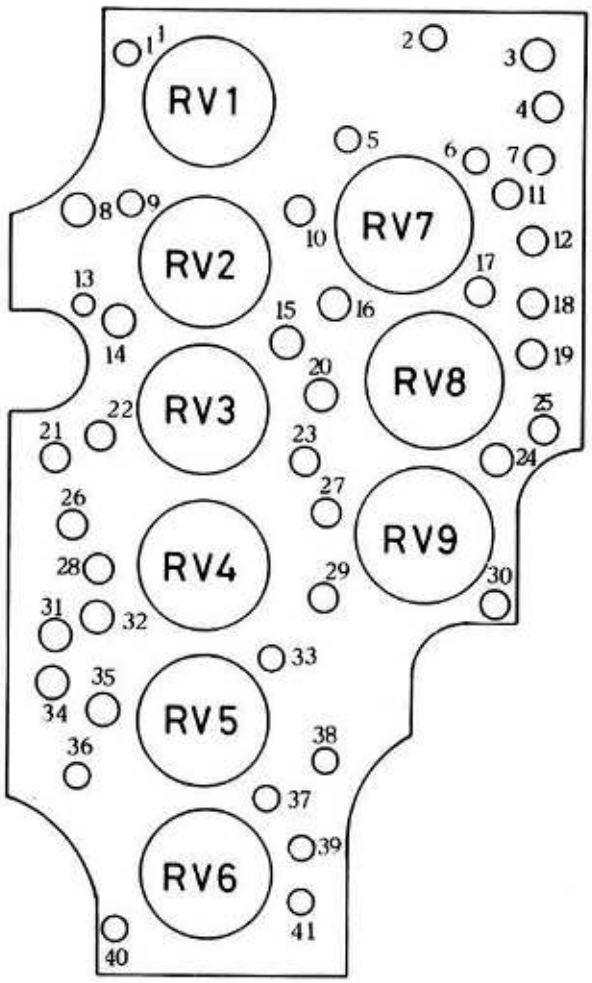

RV1 S mode adjustment

RV2 Central lever adjustment

RV3 Off-center 2 (upper-right) level adjustment

RV4 Off-center 4 (lower-right) level adjustment

RV5 Off-center 1 (upper-left) level adjustment

RV6 Off-center 3 (lower-left) level adjustment

RV7 TTL flash output control adjustment

RV8 P mode adjustment

RV9 A mode adjustment

MD base plate

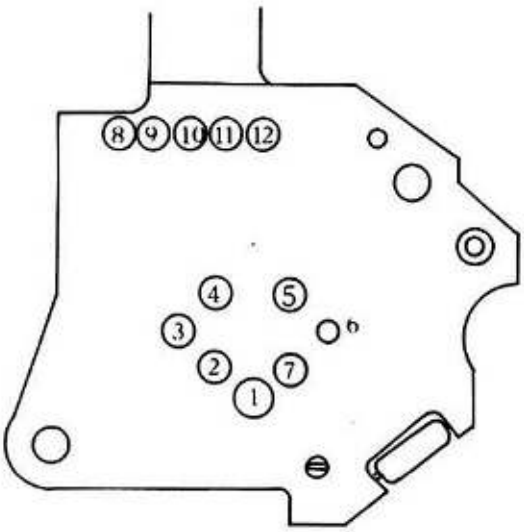

MD base plate (M1 - M12)

M1	VCC 1	M7	GND
M2	GND	M8	Verify output
M3	MD power hold	M9	Verify input
M4	MD film-advance signal	M10	SC/TO
M5	MD power sw	M11	SI
M6	MD release sig	M12	SO

Resistor blocks

B1		3, K	B22	S	C7 input
B2	L	VCCZ	B23		A1 - C7 mid point
B3	K	Shutter γ 33	B24	B	P mode level
B4	J	Shutter γ 34	B25	A	A mode level
B5		4, J	B26	Q	Integration start timing
B6	I	S mode level	B27		A mode level mid point
B7	H	D/A temperature compensation	B28	T	C6 input
B8	M	R10 terminal	B29		GND
B9		S mode level mid point	B30		25, A
B10		6, I	B31	U	R21 terminal
B11	G	A2 output	B32	W	C4 output
B12	F	A1 output	B33		A2 - C6 mid point
B13	N	GND	B34	V	R20 terminal
B14	O	A/D level	B35	X	C3 input
B15		A/D level mid point	B36		A4 - C4 mid point
B16	E	Flash output control level mid point	B37		18, D
B17E	E	Flash output control level	B38		31, U
B18	D	A4 output	B39		34, V
B19	C	A5 output	B40		A5 - C3 mid point
B20		P mode level mid point	B41		19, C
B21	P	Central	B42	R	NC

LCD READOUT

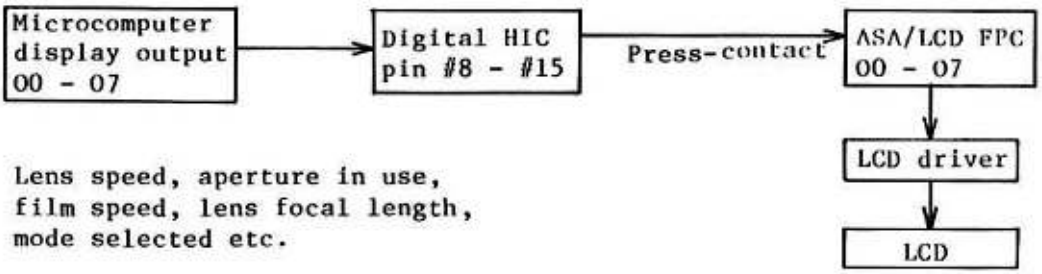

Lens speed, aperture in use,
film speed, lens focal length,
mode selected etc.

Microcomputer display outputs can be measured by AMP tester J18147.
Set the camera with 50/1.4 lens to AMP tester.

AMP tester setting: SI dial = 0 MO/AD dial = 2
READ/TEST switch = READ

Microcomputer display output is appeared on DATA 1 display.

(Example 1)

Camera setting: F2, ASA100, Frame counter = 1 or more
A mode, EV = 12

"AF" is appeared on DATA 1 display.
"A" is equivalent to 1010 and "F" to 1111 in hexadecimal.

07	06	05	04	03	02	01	00
↓	↓	↓	↓	↓	↓	↓	↓
1	0	1	0	1	1	1	1
A				F			

LCD readout is 1000

(Example 2)

Camera setting: F5.6, ASA100, M mode, EV = 12,
Frame counter = 1 or more

"78" is appeared on DATA 1 display.

7 = 0111, 8 = 1000

07	06	05	04	03	02	01	00
↓	↓	↓	↓	↓	↓	↓	↓
0	1	1	1	1	0	0	0
7				8			

LCD readout is $\overset{-+}{M}125$.

ASA/LCD FPC

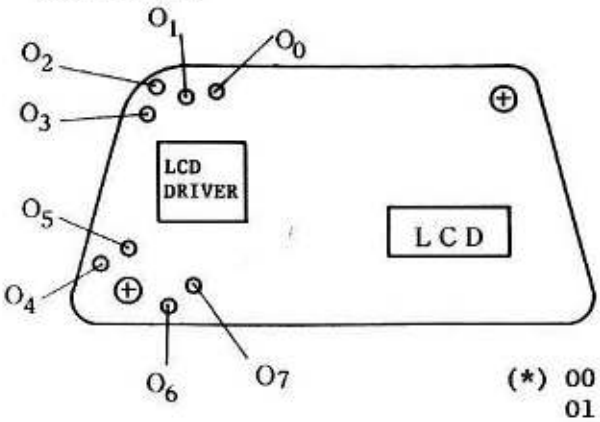

Be careful not to damage the FPC when checking.

Check S1 - S26 or L1 - L12.

(*) 00 - 07 are display outputs of MCU.
01 = 0: "-" appears in the LCD readout on M mode
02 = 0: "+" appears in the LCD readout on M mode.
01, 02 = 0: "- +" appears in the LCD readout on M mode.

O_7	O_6	O_5	O_4	O_3	O_2	O_1	O_0	LCD readout	O_7	O_6	O_5	O_4	O_3	O_2	O_1	O_0	LCD readout
0	0	0	0	0	1	1	0	0	0	0	0	0	0	1	1	1	F - -
0	0	0	1	0	1	1	0	F E E	0	0	0	1	0	1	1	1	F 1. 2
0	0	1	0	0	1	1	0	E E	0	0	1	0	0	1	1	1	F 1. 4
0	0	1	1	0	1	1	0	H 1	0	0	1	1	0	1	1	1	F 1. 8
0	1	0	0	0	1	1	0	L O	0	1	0	0	0	1	1	1	F 2
0	1	0	1	0	1	1	0	C 2 5 0	0	1	0	1	0	1	1	1	F 2. 5
0	1	1	0	0	1	1	0	4 -	0	1	1	0	0	1	1	1	F 2. 8
0	1	1	1	0	1	1	0	2 -	0	1	1	1	0	1	1	1	F 3. 5
1	0	0	0	0	↑		0	M 0	1	0	0	0	0	1	1	1	F 4
1	0	0	1	0			0	M 8 8. 8 0	1	0	0	1	0	1	1	1	F 4. 5
1	0	1	0	0			0	M E E	1	0	1	0	0	1	1	1	F 5. 6
1	0	1	1	0			0	M H I	1	0	1	1	0	1	1	1	F 8
1	1	0	0	0			0	M L O	1	1	0	0	0	1	1	1	F 1 1
1	1	0	1	0			0	M C 2 5 0	1	1	0	1	0	1	1	1	F 1 6
1	1	1	0	0			0	M 4 -	1	1	1	0	0	1	1	1	F 2 2
1	1	1	1	0			0	M 2 -	1	1	1	1	0	1	1	1	F 3 2
0	0	0	0	1			0	M 1	0	0	0	0	1	1	1	1	1
0	0	0	1	1	*		0	M 2	0	0	0	1	1	1	1	1	2
0	0	1	0	1			0	M 4	0	0	1	0	1	1	1	1	4
0	0	1	1	1			0	M 8	0	0	1	1	1	1	1	1	8
0	1	0	0	1			0	M 1 5	0	1	0	0	1	1	1	1	1 5
0	1	0	1	1			0	M 3 0	0	1	0	1	1	1	1	1	3 0
0	1	1	0	1			0	M 6 0	0	1	1	0	1	1	1	1	6 0
0	1	1	1	1			0	M 1 2 5	0	1	1	1	1	1	1	1	1 2 5
1	0	0	0	1			0	M 2 5 0	1	0	0	0	1	1	1	1	2 5 0
1	0	0	1	1			0	M 5 0 0	1	0	0	1	1	1	1	1	5 0 0
1	0	1	0	1			0	M 1 0 0 0	1	0	1	0	1	1	1	1	1 0 0 0
1	0	1	1	1			0	M 2 0 0 0	1	0	1	1	1	1	1	1	2 0 0 0
1	1	0	0	1			0	M 4 0 0 0	1	1	0	0	1	1	1	1	4 0 0 0
1	1	0	1	1			0	M 2 0 0	1	1	0	1	1	1	1	1	2 0 0
1	1	1	0	1			0	M C 2 0 0	1	1	1	0	1	1	1	1	C 2 0 0
1	1	1	1	1		↓	0	M	1	1	1	1	1	1	1	1	

LCD READOUT ON A, S, P, M MODE

AMP tester setting: SI dial = 0 MO/AD dial = 2

A mode Camera setting: 50/1.4 AI-S, Blank shots sw = High
ASA/ISO = 100

Outputs 07 - 00 (DATA 1 display)

EV \ AV	1.4	2	2.8	4	5.6	8	11	16
9	8F	7F	6F	5F	4F	3F	2F	1F
12	24	AF	9F	8F	7F	6F	5F	4F
15	36	36	CF	BF	AF	9F	8F	7F

S mode Camera setting: 50/1.4 AI-S, F = 16, Blank shots sw = High
ASA/ISO = 100

Outputs 07 - 00 (DATA 1 display)

EV \ TV	1	1/2	1/4	1/8	1/15	1/30	1/60	1/125	1/250	1/500	1/1000	1/2000
9	1F	D7	C7	B7	A7	87	67	47	27	8F	8F	8F
12	4F	4F	4F	4F	D7	C7	B7	A7	87	67	47	27
15	7F	7F	7F	7F	7F	7F	7F	D7	C7	67	A7	87

P mode Camera setting: 50/1.4 AI-S, F = 16, Blank shots sw = High
ASA/ISO = 100

Outputs 07 - 00 (DATA 1 display)

EV9: 6F, EV12: 7F, EV15: 8F

M mode Camera setting: 50/1.4 AI-S, Blank shots sw = High
ASA/ISO = 100

Outputs 07 - 00 (DATA 1 display)

EV	TV	"+"	"+ -"	"-"
9	1/15	4A	48	4C
12	1/125	7A	78	7C
15	1/1000	AA	A8	AC
		F5.6-1/3	F=5.6	F5.6+1/3

GRAY CODE TABLE FOR SV INPUT

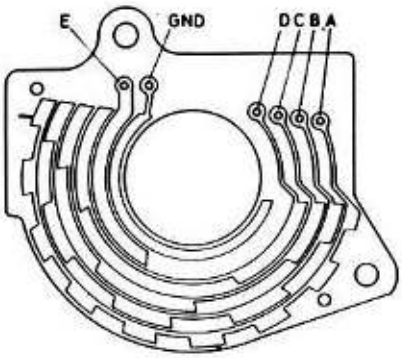

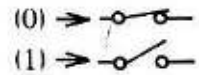

No	SV	ASA	SV4	SV3	SV2	SV1	SV0
			E	D	C	B	A
0	1	6	0	0	0	0	0
1		•	0	0	0	0	1
2		•	0	0	0	1	1
3	2	12	0	0	0	1	0
4		•	0	0	1	1	0
5		•	0	0	1	1	1
6	3	25	0	0	1	0	1
7		•	0	0	1	0	0
8		•	0	1	1	0	0
9	4	50	0	1	1	0	1
10	•	•	0	1	1	1	1
11		•	0	1	1	1	0
12	5	100	0	1	0	1	0
13		•	0	1	0	1	1
14		•	0	1	0	0	1
15	6	200	0	1	0	0	0
16		•	1	1	0	0	0
17		•	1	1	0	0	1
18	7	400	1	1	0	1	1
19		•	1	1	0	1	0
20		•	1	1	1	1	0
21	8	800	1	1	1	1	1
22		•	1	1	1	0	1
23		•	1	1	1	0	0
24	9	1600	1	0	1	0	0
25		•	1	0	1	0	1
26		•	1	0	1	1	1
27	10	3200	1	0	1	1	0
28		•	1	0	0	1	0
29		•	1	0	0	1	1
30	11	6400	1	0	0	0	1
31		•	1	0	0	0	0

GRAY CODE TABLE FOR fo SIGNAL INPUT

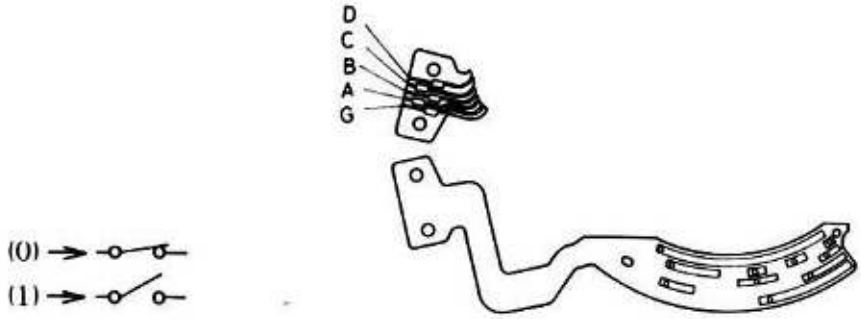

No.	fo	AV3	AV2	AV1	AV0
		D	C	B	A
0		0	0	0	0
1	f 1.2	0	0	0	1
2	f 1.4	0	0	1	1
3	f 1.8	0	0	1	0
4	f 2	0	1	1	0
5	f 2.5	0	1	1	1
6	f 2.8	0	1	0	1
7	f 3.5	0	1	0	0
8	f 4	1	1	0	0
9	f 4.5	1	1	0	1
10	f 5.6	1	1	1	1
11	f 8	1	1	1	0
12	f 11	1	0	1	0

GRAY CODE TABLE FOR FOCAL LENGTH (Fmm) SIGNAL

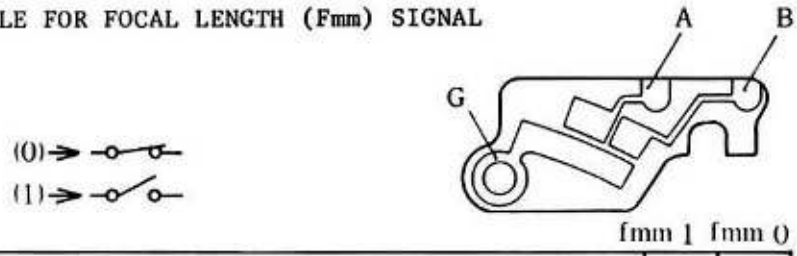

	Lens focal length	B	A
0	105 mm or shorter/Fmm signal not provided	1	1
1	135 mm or longer	1	0
2	Teleconverter attached	0	1

GRAY CODE TABLE FOR TV (SHUTTER SPEED) INPUT

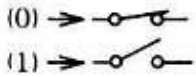

TV	Shutter dial	TV3	TV2	TV1	TV0
		D	E	F	G
0	1	0	0	0	0
1	2	0	0	0	1
2	4	0	0	1	1
3	8	0	0	1	0
4	15	0	1	1	0
5	30	0	1	1	1
6	60	0	1	0	1
7	125	0	1	0	0
8	250	1	1	0	0
9	500	1	1	0	1
10	1000	1	1	1	1
11	2000	1	1	1	0
12	4000	1	0	1	0

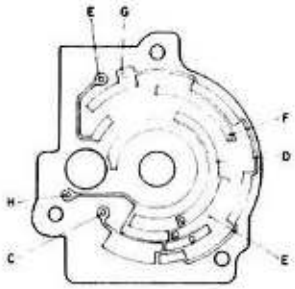

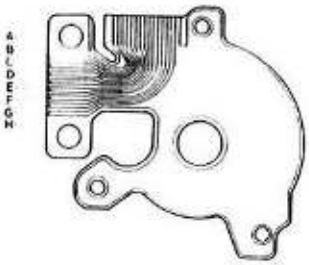

C: Mechanical release LED

H: GND

GRAY CODE TABLE FOR EXPOSURE MODE INPUT

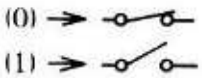

No.	Mode	SW1	SW0
		B	A
0	P	0	0
3	S	1	0
2	A	1	1
1	M	0	1

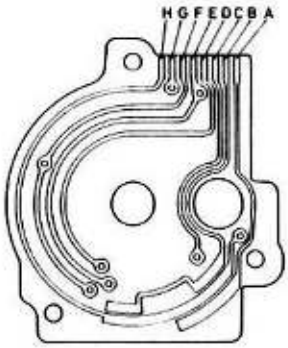

GRAY CODE TABLE FOR f-fo SIGNAL INPUT

No.	(AV-AVo)4	(AV-AVo)3	(AV-AVo)2	(AV-AVo)1	(AV-AVo)0	Lens F1.2	Lens F1.4	Lens F1.8	Lens F2
	E	D	C	B	A				
0	0	0	0	0	0	1.2	1.4	1.8	
1	0	0	0	0	1	1.4		2	2
2	0	0	0	1	1				
3	0	0	0	1	0		2		
4	0	0	1	1	0	2		2.8	2.8
5	0	0	1	1	1				
6	0	0	1	0	1		2.8		
7	0	0	1	0	0	2.8		4	4
8	0	1	1	0	0				
9	0	1	1	0	1		4		
10	0	1	1	1	1	4		5.6	5.6
11	0	1	1	1	0				
12	0	1	0	1	0		5.6		
13	0	1	0	1	1	5.6		8	8
14	0	1	0	0	1				
15	0	1	0	0	0		8		
16	1	1	0	0	0	8		11	11
17	1	1	0	0	1				
18	1	1	0	1	1		11		
19	1	1	0	1	0	11		16	16
20	1	1	1	1	0				
21	1	1	1	1	1		16		
22	1	1	1	0	1	16		22	22
23	1	1	1	0	0				
24	1	0	1	0	0		(22)		
25	1	0	1	0	1	(22)		(32)	(32)

1. METERING SEQUENCE

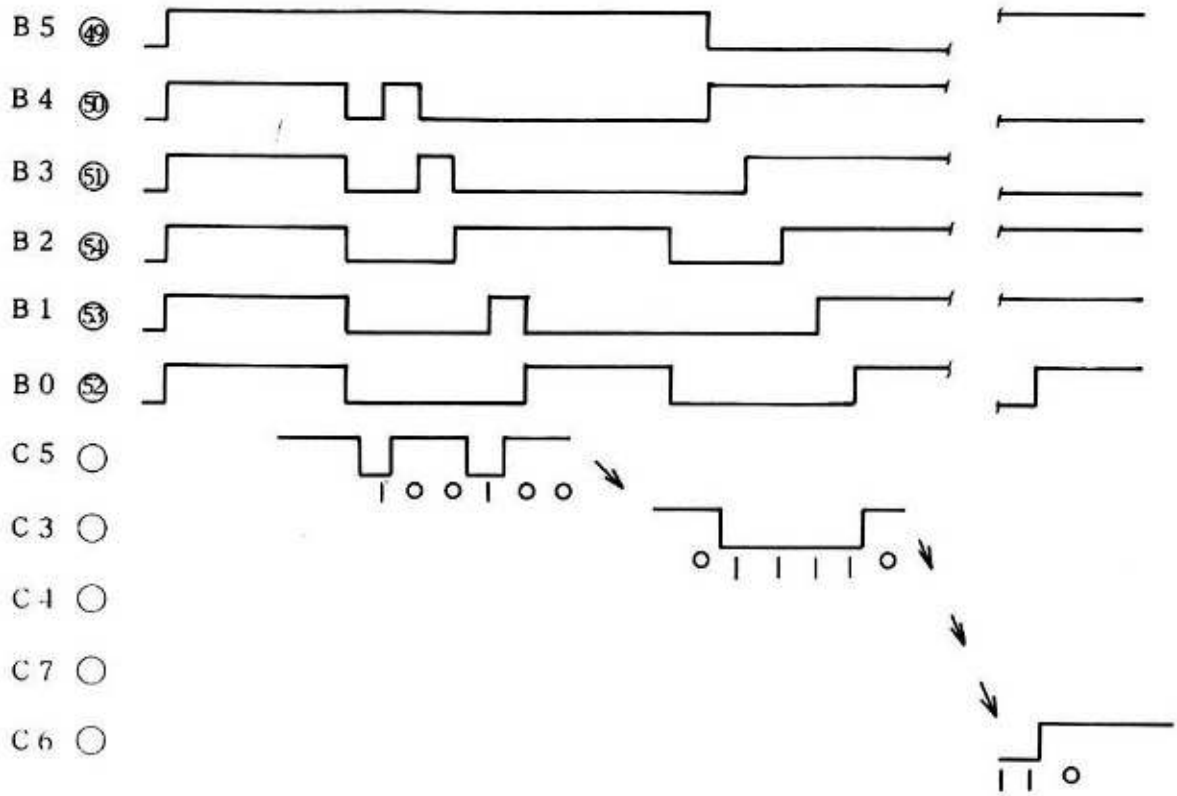

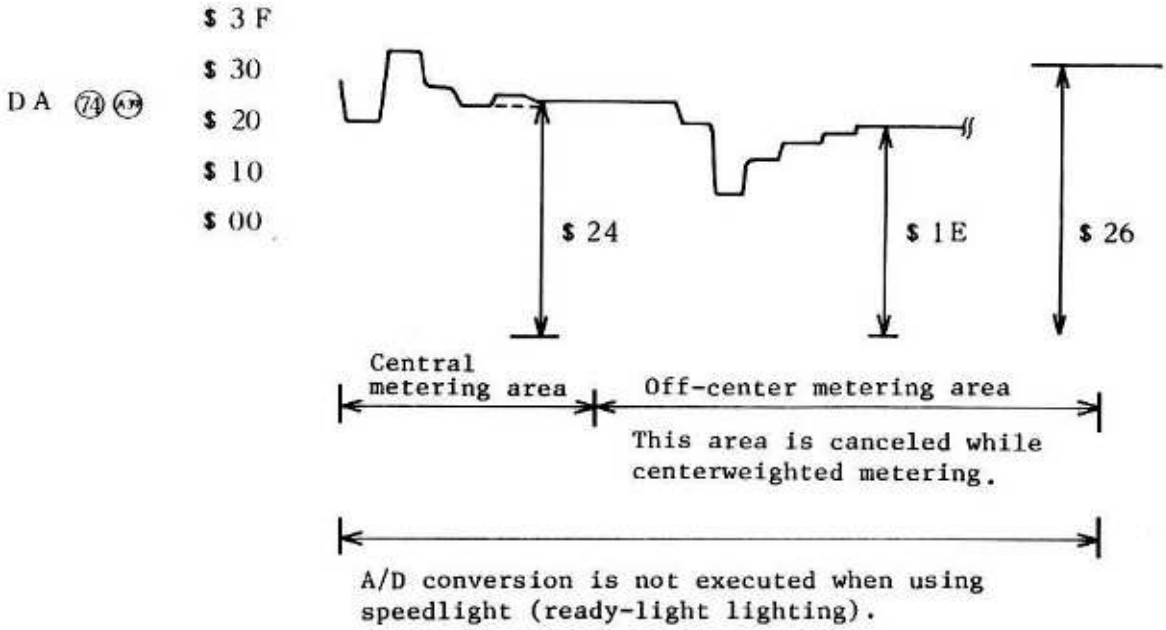

2. SHUTTER RELEASE SEQUENCE

(1) A, M modes

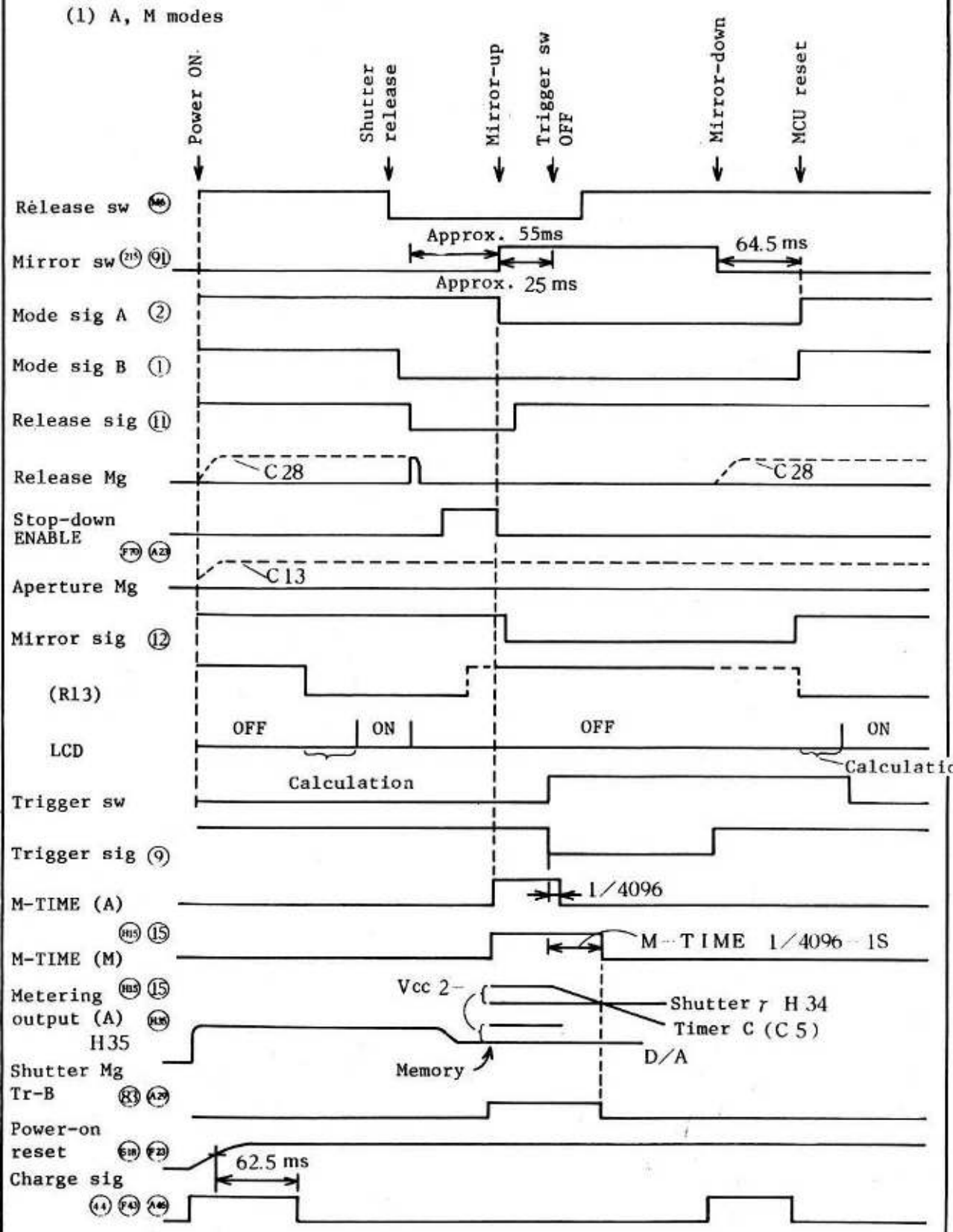

(2) S, P mode

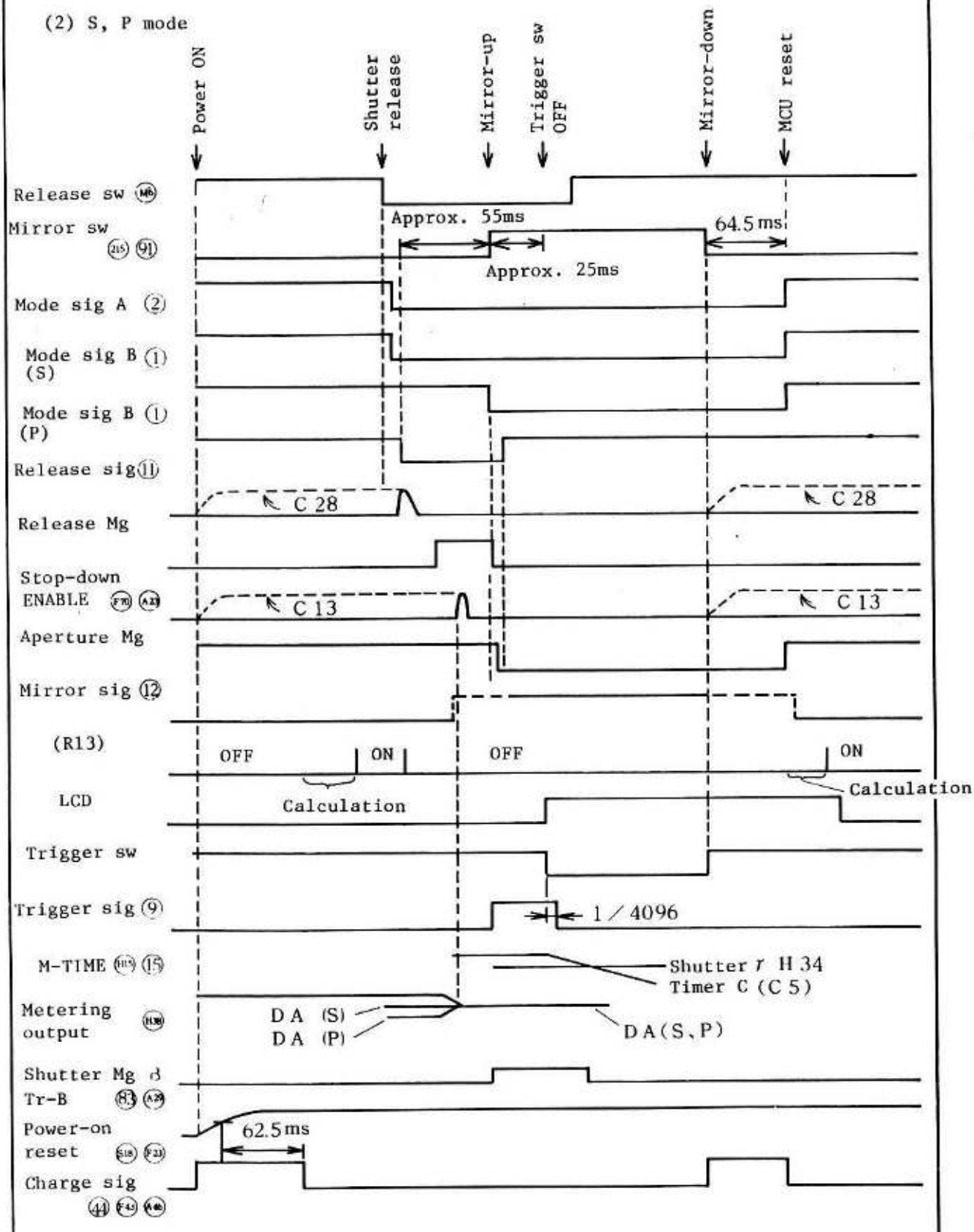
Power ON
Shutter release
Mirror-up
Trigger sw OFF
Mirror-down
MCU reset
Release sw
Mirror sw
Approx. 55ms
64.5 ms
Approx. 25ms
Mode sig A
Mode sig B (S)
Mode sig B (P)
Release sig
C 28
C 28
Release Mg
Stop-down ENABLE
C 13
C 13
Aperture Mg
Mirror sig
(R13)
OFF
ON
OFF
ON
LCD
Calculation
Calculation
Trigger sw
Trigger sig
1 / 4096
M-TIME
Shutter
H 34
Timer C (C 5)
Metering output
DA (S)
DA (P)
DA(S, P)
Shutter Mg
Tr-B
Power-on reset
62.5ms
Charge sig

(3) TTL flash output control mode

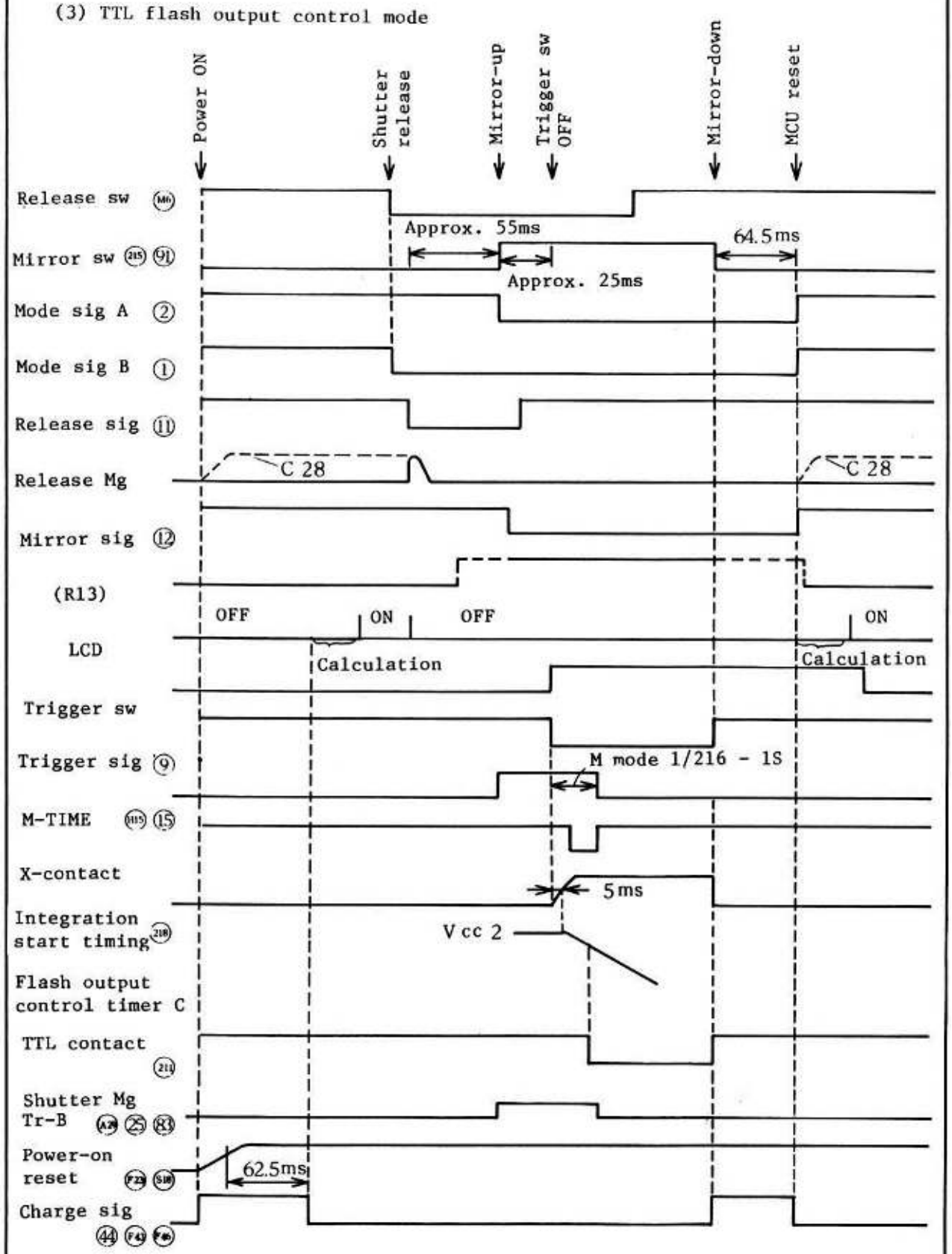

CIRCUITRY OUTLINES

Contents Page

1 POWER CONTROL CIRCUIT C1

2 METERING CIRCUIT C4

3 SHUTTER CONTROL CIRCUIT C9

4 D/A CONVERTER ARCHITECTURE/APERTURE CONTROL CIRCUIT C12

5 TTL FLASH OUTPUT CONTROL CIRCUIT C19

6 DIGITAL HIC (INPUT) C21

7 DIGITAL HIC (OUTPUT) C24

8 VIEWFINDER DISPLAY C28

9 RELEASE SIGNAL FLOW C31

TROUBLESHOOTING FLOWCHART

1 SHUTTER FAILS TO BE RELEASED C33

2 SHUTTER IS HELD OPEN C37

3 APERTURE FAILS TO BE CONTROLLED ON P AND S MODES C39

4 SHUTTER SPEEDS DELIVERY IS FAULTILY HIGH-SPEED C44

5 LCD READOUT FAILS TO OPERATE C46

6 APERTURE CONTROL ON P AND S MODES ARE INACCURATE C48

7 INCORRECT ADJUSTMENT OF SHUTTER SPEEDS DELIVERY

7-1 Incorrect adjustment of AMP metering C49

7-2 Incorrect adjustment of off-center areas variable resostors C51

7-3 Incorrect adjustment of automatic exposure C53

7-4 Shutter speed M1/4000 is inaccurate C54

8 TTL FLASH OUTPUT CONTROL IS INACCURATE C55

1. POWER CONTROL CIRCUIT

Vcc1: Power directly supplied from the batteries to the power control circuit

As the oscillation circuit is not operated before power switch is turned on, current drains slightly. (C1, C2, C28)
Setting shutter dial to M250 or B cancels power supply.
When attaching Motor drive MD-15, power supply terminal is moved by the protrusion of the MD-15 and power source is changed from camera's batteries to the MD-15's batteries.

Vcc2: Power that activates the power control circuit after power switch is turned on

(1) Depressing shutter release button halfway turns power switch on. Power hold circuit operates to turn TRANSISTOR Q3 on and Vcc2 increases up to the voltage of Vcc1. Then power is supplied to the whole circuit. Vcc2 supplies power to the circuit while power switch is held on.

(2) BCH1 (COMPARATOR C1 output) and BCH2 (COMPARATOR C2 output) are varied along Vcc1 value. By laser trimming of RESISTORS R1 and R2, BCH1 and BCH2 have been adjusted as follows.

Vcc1 2.45V: BCH1 = High, BCH2 = High

2.45V Vcc1 2.35V: BCH1 = Low, BCH2 = High

2.35V Vcc1 2.30V: A histeresis is provided for COMPARATOR C2.
BCH1 = Low, BCH2 = High
(When Vcc1 goes down)
BCH1 = Low, BCH2 = Low
(When Vcc1 goes up)

2.30V Vcc1: BCH1 = Low, BCH2 = Low

(3) When both BCH1 and BCH2 are high, the power signal becomes high to start timing of the power hold for 16 sec. after lifting finger off from shutter release button and turning power switch off. When BCH1 is low, the power hold circuit operates for 1/8 sec.. While the power hold circuit is in operation, the power turns high to hold TRANSISTOR Q3 on and Vcc2 remains on for 16 sec. or 1/8 sec.. Turning the power hold signal low makes TRANSISTOR Q3 off and Vcc2 becomes 0V.

(4) When BCH2 is low, the terminal EN of LCD driver turns low to turn LCD readout off. Also, both ready-light and exposure compensation LEDs are turned off and shutter release is prohibited.

Figure 1 Power control circuit

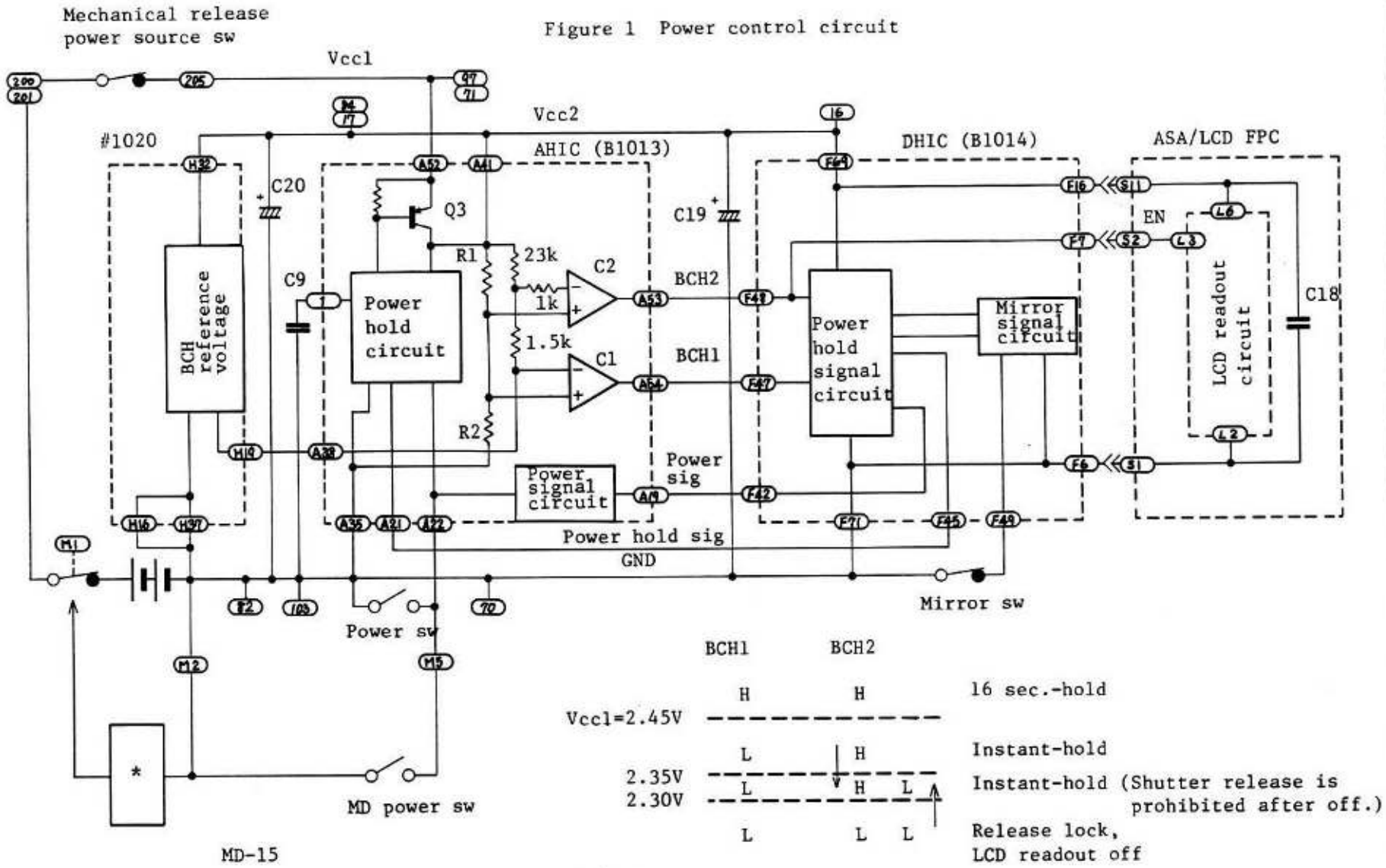

* Power source for the camera

FAA16001-R.3130.A

(5) When shutter is released during power hold, the release switch turns on to reset 16 sec.-hold and the power hold timing starts again after 64.5 ms from mirror switch on (morror down).

(6) Power supply can be checked by appearance of LCD readout.

(7) When BCH1 and BCH2 are abnormal, check if the BCH reference voltage (H19, A3) are (Vcc2 - 1.237V).

(8) CONDENSERS C18, C19 and C20 function as power source condenser.

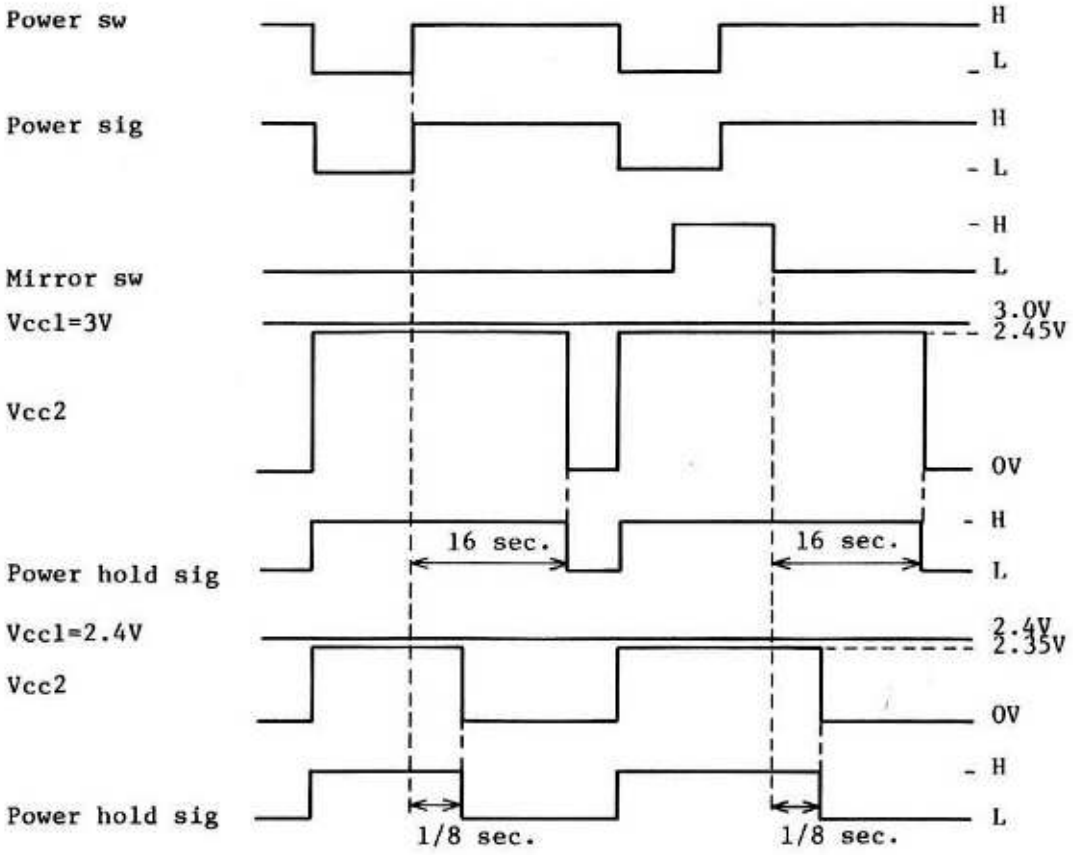

Figure 2 Power control timing chart

2-1 METERING CIRCUIT (A/D CONVERSION)

The center area outputs of SPD D1 and D2 flow into HEAD AMPLIFIER A3 in paralell, and the off-center areas outputs flow into HEAD AMPLIFIERs A1, A2, A4 and A5 respectively. HEAD AMPLIFIERs A1 - A5 are of the same circuitry architecture. As the center area outputs are utilized for the exposure control, only HEAD AMPLIFIER A3 has been provided with off-set adjustment through the laser trimming of RESISTORs R20 and R21.

The outputs of HEAD AMPLIFIERs A1 - A5 flow COMPARATORs C7 - C3 respectively via resistors. Deviations of off-center area outputs for the center area output is compensated by VARIABLE RESISTORs RV3, RV4, RV5 and RV6 when the brightness level of the scene is even.

The outputs of D/A converter controlled by Microcomputer unit (MCU) are inputted to anti-reverse input terminals of COMPARATORs C7 - C3, and the outputs processed in comparison with the metering output are inputted to Terminals F37 - F41 of Digital hybrid IC (DHIC).
In the DHIC, the outputs are fed into the MCU via GATE CIRCUITs SC and SD, and the MCU recycles the outputs to the comparators.
Thus, COMPARATORs C7 - C3, GATE CIRCUITs $C and $D, MCU and D/A converter form the sequential comparison A/D conversion device to digitalize the metering outputs.

The architecture of D/A output is shown in Figure 4. When release switch is off, the outputs of D/A converter are shfted by VARIABLE RESISTOR RV2 (Check land B14) and are supplied at Terminals A39 and H18. The center area output can be adjusted by turning VARIABLE RESISTOR RV2. Turning RV2 effects also the all metering outputs, but the off-center areas outputs are adjusted by turning VARIABLE RESISTORs RV3 - RV6.

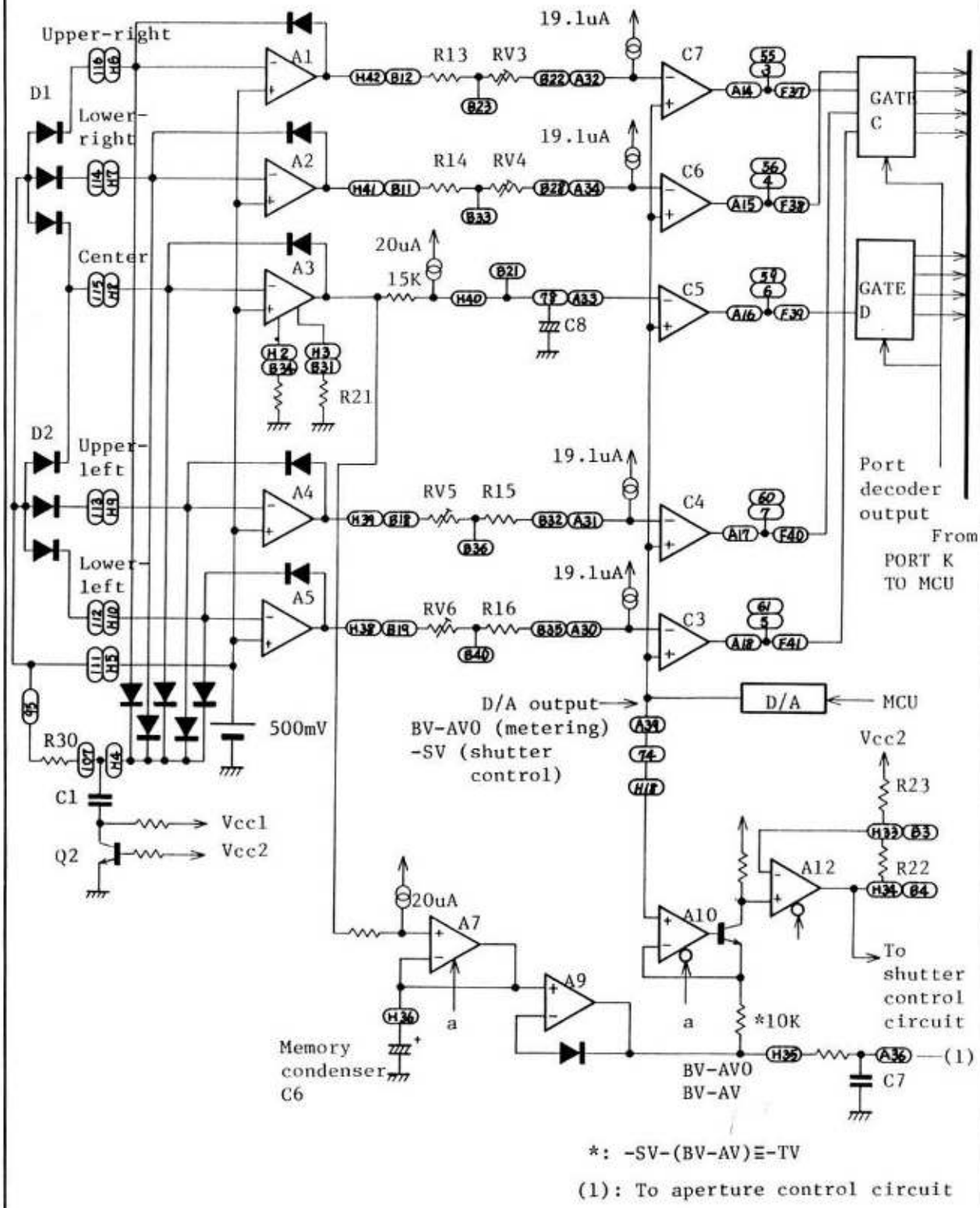

Figure 3 Metering circuit block diagram

2-2 A/D CONVERSION SEQUENCE

Refer to the metering sequence timing chart. 6-bit D/A converter covers the digits from 000000 to 111111. In hexadecimal, they are indicated as $00 - $3F. A, B, C, D, E and F in hexadecimal correspond to 10, 11, 12, 13, 14, and 15 in decimal system.

Table 1 shows the metering outputs with a 50/1.4 lens attached. The off-center metering level has been shifted by 1/6EV lower than that of the center area.

Brightness value 50/1.4 (ISO 100)	Metering outputs	
	Center	Off-center
EV 0	$(00)	
1	03	
2	06	
3	09	
4	0C	0C - 0B
5	0F	0F - 0E
6	12	12 - 11
7	15	15 - 14
8	18	18 - 17
9	1B	1B - 1A
10	1E	1E - 1D
11	21	21 - 20
12	24	24 - 23
13	27	27 - 26
14	2A	2A - 29
15	2D	2D - 2C
16	30	30 - 2F
17	33	33 - 32
18	36	36 - 35
19	39	39 - 38
20	3C	3C - 3B
21	(3F)	

The sequential comparison and A/D conversion are executed by COMPARATOR C5, INPUT GATE $D, MCU and D/A CONVERTER. See an example of the sequential A/D conversion.

① Brightness is EV12 and the center metering outputs $24.

② The MCU's reference values B5 - B0 are initially set to 100000 ($20), and the D/A CONVERTER outputs $20.

③ Comparison is made between the outputs of the center metering and the D/A CONVERTER.

④ COMPARATOR C5's output is low.

⑤ Then, the C5's output is fed into the MCU via INPUT GATE $D. The place 2^5 of register of the MCU is set to 1.

⑥ The reference values B5 and B4 are set to 1, and the D/A CONVERTER outputs $30 (110000).

⑦ Comparison is again made between the outputs of the center metering and the D/A CONVERTER.

Center metering $24 < D/A CONVERTER $30

⑧ COMPARATOR C5's output is high. It tells the MCU that the setting of the reference value B4 is not correct.

⑨ Then, the C5's output is fed into the MCU via INPUT GATE $D. The place 2^4 of register of the MCU is set to 0.

⑩ The reference values B4 is set to 0 and B3 to 1, and the D/A CONVERTER outputs $28 (101000).

⑪ Comparison is again made between the outputs of the center metering and the D/A CONVERTER.

Center metering $24 < D/A CONVERTER $28

⑫ COMPARATOR C5's output is high. It tells the MCU that the setting of the reference value B3 is not correct.

⑬ Next, the C5's output is fed into the MCU via INPUT GATE $D. The place 2^3 of register of the MCU is set to 0.

⑭ The reference values B3 is set to 0 and B2 to 1, and the D/A CONVERTER outputs $24 (100100).

⑮ Comparison is again made between the outputs of the center metering and the D/A CONVERTER.

Center metering $24 ≥ D/A CONVERTER $24

⑯ COMPARATOR C5's output is low. In the same procedure, the place 2^2 of register of the MCU is set to 1 and the reference value B1 is set to 1. The D/A CONVERTER OUTPUTS $26 (100110).

⑰ Thus, Center metering $24 < D/A CONVERTER $26

⑱ COMPARATOR C5's output is high. The place 2^2 of register of the MCU is set to 0. The reference value B1 is set to 0 and B0 to 1. The D/A CONVERTER OUTPUTS $25 (100101).

⑲ Thus, Center metering $24 < D/A CONVERTER $25

⑳ This will be followed by the processing of the MCU and finally the output of the D/A CONVERTER is determined for $24.

On A. S and P modes, metering outputs of off-center areas are also converted from analog to digital to realise the AMP metering. COMPARATORs C3, C4, C7 and C6 are corresponded to terminals 0, 1, 2 and 3 of INPUT GATE $C. The off-center metering outputs range between $23 - $24 ($1E) at EV12 with a 50/1.4 lens attached. D/A converter outputs are compared with the off-center metering outputs sequentialy in the same comparison process as the center metering outputs.

See an example that the off-center metering output of lower-left segment are $1E. The following comparisons show that the level of D/A converter output becomes equal to that of the metering output of lower-left segment (C3 input terminal).

Off-center metering output		D/A converter output
$1E	<	$20
$1E	≧	$10
$1E	≧	$18
$1E	≧	$1C
$1E	≧	$1E
$1E	<	$1F

In this way, the A/D conversions of upper-left, upper-right and lower-right segments are executed.

The A/D conversion of center metering outputs only will be in operation when 1) Meter mode switch is turned on, 2) Stop down switch is turned on, 3) exposure mode is M mode, 4) fo signal is not supplied. The A/D conversion is canceled when the ready-light terminal is charged with a speedlight unit.

2-3 EXPOSURE CONTROL

Aperture control and shutter speed control are based on the center metering output. HEAD AMPLIFIER A3 of center area is connected to AMPLIFIERs A7 and A9. AMPLIFIER A7 is kept floating by Signal a provided from Shutter control circuit (Figure 3) during mirror rise (t3 - t6) to memorize the metering output after aperture control. AMPLIFIER A9 is a buffer amplifier and the output of A9 is the metering output for exposure control. The metering output is equal to BV-AVO at full aperture and is equal to BV-AV at aperture stopped down. The shift of outputs between two adjacent f/stops is approx. 18mv. RESISTOR R38 and CONDENSER C7 are connected to Aperture control circuit (Figure 4) for noise reduction.

Shutter speed calculation circuit

AMPLIFIERs A10 and A12 are operated by Signal a provided from Shutter speed control circuit during mirror rise (t3 - t6) on A, S and P modes. After mirror rise, the D/A output corresponding to -SV is generated by MCU. When the output corresponding to -SV is provided with the anti-reverse input terminal of AMPLIFIER A10, the potential of reversed terminal is also corresponding to -SV. As the output of AMPLIFIER A9 becomes BV-AV after mirror rise, the potential difference between both the terminals of resistor 10kΩ indicated by the mark "*" in Figure 2 is (-SV)-(BV-AV). This leads (-SV)-(BV-AV)≡(-TV). Thus, the potential difference of the resistor is corresponding to -TV.

RESISTORs R22 and R23 are approx. 20kΩ, and amplify the output of AMPLIFIER A12 nearly twice. By laser trimming of RESISTORs R22 and R23, the shutter γ is adjusted, and the output of AMPLIFIER A12 shifts approx. 36mv per one f/stop.

3 SHUTTER SPPED CONTROL CIRCUIT

Figure 3 shows Shutter speed cotrol circuit. Release signal, Mirror signal, Trigger signal, M-TIME and A/M signal are sequence signals generated from Digital HIC.
The output of AMPLIFIER A12 (-TV) flows to the reversed terminal of COMPARATOR A13.

Speed input sequence

t0: Release signal turns low simultaneously with shutter release.

t1: M-TIME becomes high during mirror rise.

t2: Mirror signal goes low.

t3: Release signal goes high.

t4: Turning the trigger switch off turns Trigger signal low.

t6: Trigger signal turns high along mirror down.

t7: After approx. 65ms (on MCU reset), the mirror signal turns high.

On M mode, M-TIME will turn low after a lapse of shutter speed selected. On A, S and P modes, M-TIME will turn low after a lapse of 1/4000sec. and limit the highest shutter speed.

Speed control sequence

By the mirror signal and the release signal, the output of NAND 1 remains high in the speed input sequence t0 - t7. By the trigger signal and output of NAND 1, the output of NAND 2 remains low in t0 - t4 and t6 - t7. Holding the trigger transistor on in t0 - t4 short-circuits TIMER CONDENSER C5. Holding the trigger transistor off in t4 - t6 charges TIMER CONDENSER C5. The output of NAND 3 is held low in t3 - t5 by the release signal and M-TIME.
The output of NAND 4 is held high in t3 - t5 by the trigger signal and output of NAND 3.

As A/M signal is high on M, speedlight and blank shots modes, inverter output turns low to hold the output of NAND 5 high.
On the other hand, A/M signal turns low on A, S and P modes and inverter output turns high to hold the output of NAND 5 low in t3 - t6. The output of NAND 5 functions as Signal a in Figure 2 and it activates AMPLIFIERs A10, A12 and A13 in t3 - t6.

On M mode, the output of NAND 5 turns high to make the output of AMPLIFIER A13 low. The AND output as well as OR gate output is equal to M-TIME signal, and thus TRANSISTOR Q4 (shutter control) is held on in t3 - t5 to determine the shutter speed.
The output of NAND 4 limits Shutter control magnet charge within the sequence t3 - t6.

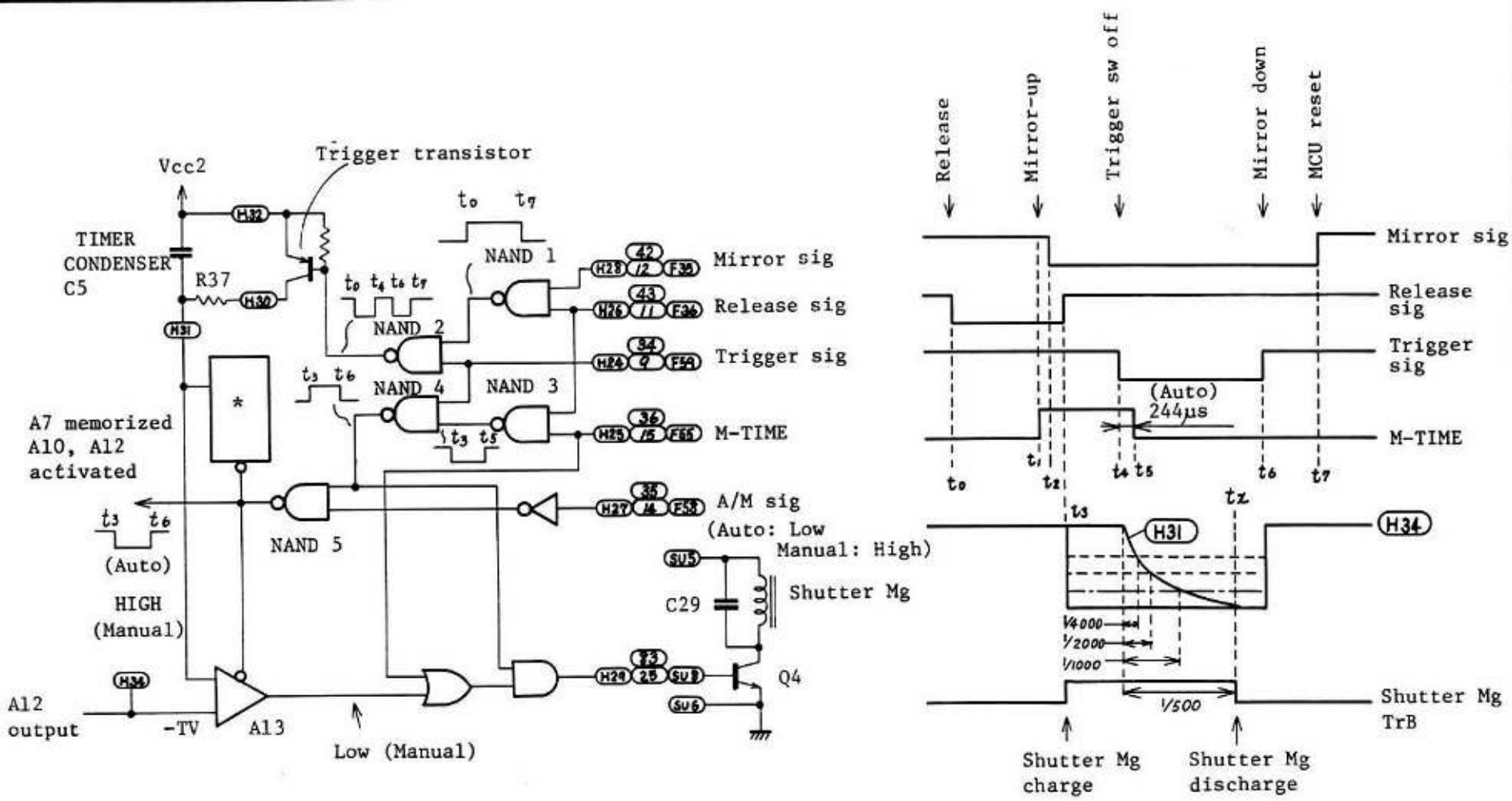

*: Timer current circuit

Figure 4 Shutter speed control circuit

FAA16001-R.3130.A

On A, S and P modes, the output of NAND 5 turns low to activate AMPLIFIER A13 in t3 - t6. When the output of AMPLIFIER A12 is corresponding to -TV, TIMER CONDENSER C5 is short-circuited in t3 - t6 and the voltage of anti-reverse terminal of AMPLIFIER A13 is nearly equal to Vcc2. It allows the output of A13 to turn high and discharge TRANSISTOR Q4. When the output of A12 is corresponding to 1/500sec, the output level of TIMER CONDENSER C5 becomes lower than that of A12 after a lapse of 1/500sec.
The output of A13 turns low and the outputs of both OR gate and AND gate turn low. TRANSISTOR Q4 turns off to discharge the shutter control magnet. So the closing curtain starts to travel.

4 D/A CONVERTER OUTPUT ARCHITECTURE & APERTURE CONTROL CIRCUIT

4-1 D/A CONVERTER OUTPUT ARCHITECTURE

The D/A converter is of 6-bit type (R-2R) controlled by the MCU. The output IDA alters along the values of $00 - $3F and will be supplied at both the terminals of RESISTOR R3. AMPLIFIER A7 is controlled by the mode changeover gate circuit. One of anti-reverse input terminals of A7 is selected according to ON/OFF of the release signal, mirror signal, mode signals A/B and ready-light contact. The selected terminal is connected to the anti-reverse input terminal of COMPARATOR A13 to generate D/A converter output at TERMINAL A39 (A13 output).
The reference voltage of 237mv for D/A converter IC as well as the head amplifier is fed into AMPLIFIER A1 and A1 generates the reference current source of 19.1μA for the mode selector IC.

Metering

When the release signal, mirror signal and mode signal A are high, the level of TERMINAL A25 is inputted into COMPARATOR A13. To perform A/D conversion, the signal BV-AVO is set by MCU and then a proper voltage for both the terminals of RESISTOR R3 is generated in D/A converter. D/A converter output of TERMINAL A39 is altered by changing value of VARIABLE RESISTOR RV2, and thus the A/D conversion level of the metering output of center area can be adjusted.

Aperture control

Conditions: Mirror signal: High, Release signal: Low,
Ready-light: Off, TERMINAL 49: Low

① S mode

Mode signals A and B are turned low to input the level of TERMINAL A24 into COMPARATOR A13. The signal (TV-SV) is set into D/A converter bv MCU and the proper voltage is generated at both the terminals of RESISTOR R3. D/A output of TERMINAL A39 is altered by changing value of VARIABLE RESISTOR RV1 and thus aperture control is enabled on S mode.

② P mode

The mode signal A turns low and the mode signal B high to input the signal (AV-AVO) of P mode calculation circuit into COMPARATOR A13. The signal (AVO-SV+γ) is set into D/A converter by MCU. D/A output of TERMINAL A39 becomes the signal (AV-SV+γ).

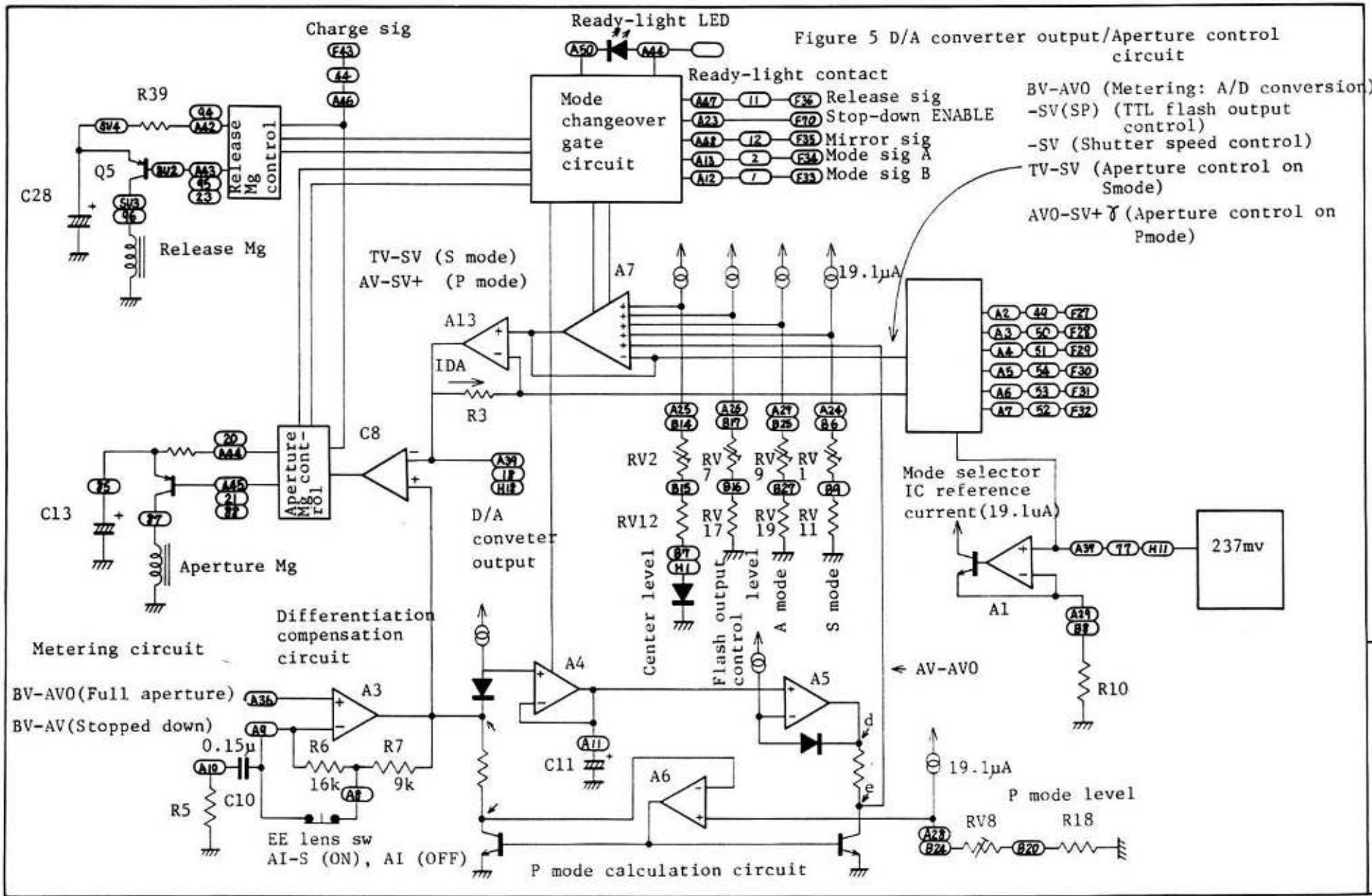

Figure 5 D/A converter output/Aperture control circuit

BV-AVO (Metering: A/D conversion)
-SV(SP) (TTL flash output control)
-SV (Shutter speed control)
TV-SV (Aperture control on Smode)
AVO-SV+ γ (Aperture control on Pmode)

Shutter control

Conditions: Mirror signal: Low, Ready-light: Off
TERMINAL A49: Low

The level of TERMINAL A27 is inputted into COMPARATOR A13. The signal (-SV) is set into D/A converter by MCU to generate the proper voltage at both the terminals of RESISTOR R3. The level of the signal (-SV) adjusted by VARIABLE RESISTOR RV9 is generated at TERMINAL A39. Thus, shutter speed on A mode and correct exposure on S and P modes are determined.

TTL flash output control

The ready-light LED is charged to turn TERMINAL A49 high. When the release signal or the mirror signal is held low after shutter release, the level of TERMINAL A26 is inputted into COMPARATOR A13. D/A converter output becomes the signal (-SV(SP)) and the proper voltage is generated at both the terminals of RESISTOR R3. The level of the signal (-SV(SP) adjusted by VARIABLE RESISTOR RV7 is generated at TERMINAL A39 to realize TTL flash output control.

4-2 APERTURE CONTROL CIRCUIT

Differentiation compensation circuit

The metering output BV-AVO (full aperture) or BV-AV (stopped down) is inputted into the anti-reverse input terminal of OP AMPLIFIER A3. The differentiation compensation circuit compensates the time lag where the aperture magnet stops down aperture. The EE lens switch (A) in turned on and RESISTOR R7 is used when an AI-S type lens is mounted. In case of the other type lenses, the EE lens switch (A) is turned off and both RESISTORs R6 and R7 are used.

Aperture control on S mode

Figure 6 shows the metering output, differentiation compensation output and D/A converter output after shutter release with a 50/1.4 AI-S type lens. After approx. 10ms from shutter release, aperture starts to move and aperture stop down is completed after approx. 40ms. D/A converter output of TERMINAL A39 is set to (TV-SV) and it is inputted into the reverse input terminal of COMPARATOR C8. Output of COMPARATOR C8 turns high at full aperture. When aperture is stopped down to f/5.6, BV-AV=TV-SV is obtained and it becomes BV+SV=TV+AV. Thus, the correct aperture value (AV) for shutter speed (TV) in use is determined. When the differentiation output increases up to the D/A converter output (TV-SV), COMPARATOR C8 and TERMINAL A45 of the aperture magnet control unit turn low to switch TRANSISTOR Q1 on. Then, charging the aperture magnet with CONDENSER C13 stops the aperture stop down. This timing is corresponded to crosspoint of the metering output and D/A converter output lines in the graph.

Aperture control on P mode

P mode calculation circuit

The optential of the anti-reverse input terminal of AMPLIFIER A4 is higher than the metering output at full aperture (BV-AVO) by the portion of one diode. The anti-reverse input terminal of OP AMPLIFIER A4 is floated between shutter release and mirror down, and the potential at full aperture is memorized in PROGRAM MEMORY CONDENSER C11. The output of OP AMPLIFIER A5 is equal to the signal (BV-AVO), and the voltage between Points b and c is equal to the voltage between Points d and e in Figure 5. The potential of Point C is adjusted by VARIABLE RESISTOR RV8. The level of the metering output (BV-AV) is inputted into Point b via the differentiation compensation circuit. The potential difference between Points d and e, as well as the difference between Points b and c, corresponds to the signal (BV-AV) since the potential of Point c is functioned as level shift. The output of OP AMPLIFIER A5 (Point d) becomes (BV-AVO) and accordingly, the output of P mode calculation circuit (Point e) becomes (AV-AVO).

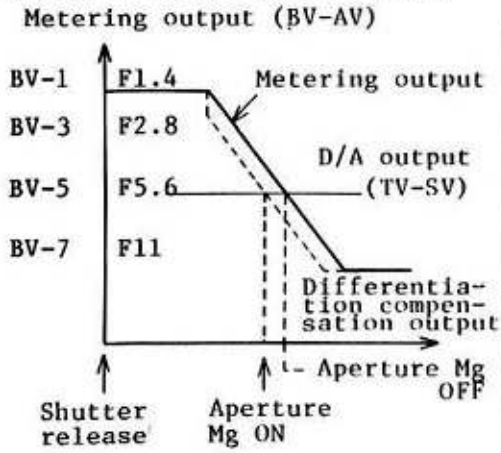

Figure 6

Aperture control on P mode

Figure 7 shows the metering output, differentiation compensation output, D/A converter output and (AV-SV+γ) after shutter release with mounting a 50/1.4 AI-S type lens. The output of COMPARATOR C8 remains high at full aperture. When aperture is stopped down after shutter release, the metering output (BV-AV) goes down but the D/A converter output (AV-SV+γ) goes up. When aperture is stopped down to f/5.6, BV-AV=AV-SV+γ is obtained, and it becomes AV=1/2(BV+SV)-γ/2. Then, TV=1/2(BV+SV)+γ/2 is obtained when shutter speed is controlled. In case a lens of less than 135mm is mounted, Switches fmm 1 and fmm 0 of Focal length switch turn off and γ is equal to 2 so as to activate a Normal program.

On the other hand, in case a lens of 135mm or longer, or a teleconverter is mounted, Switches fmm 1 and fmm 0 turn on and γ is equal to 5 so as to activate a High-speed program.

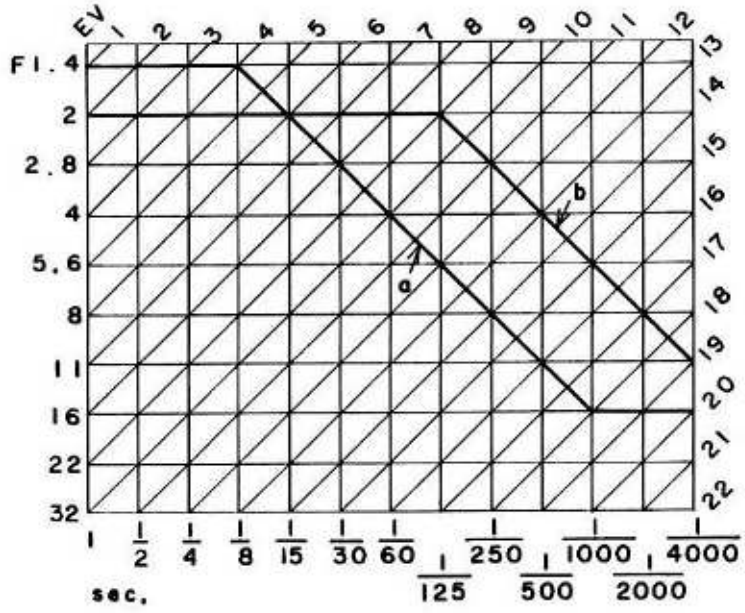

a: Normal program (50/1.4)

b: High-speed program (135/2)

Figure 8 Program lines

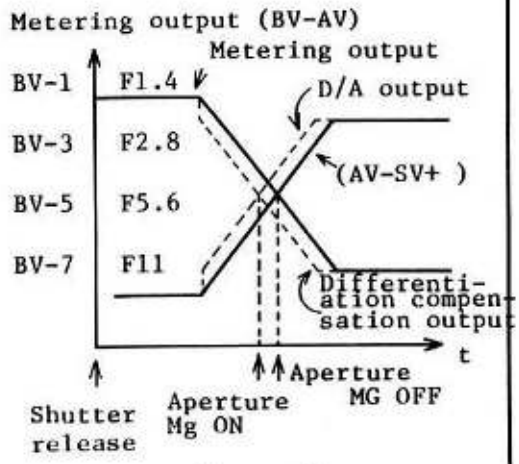

Figure 7

Aperture control

Aperture is not controlled but is stopped down to the f-number in set when the camera is the following conditions.

1) A and M modes

When the release signal turns low after shutter release, the mode signal A turns high to prohibit the aperture magnet control circuit operation.

2) S and P modes

a) Ready-light LED in charge

When the release signal turns low after shutter release, the mode signal A turns high to prohibit the aperture magnet circuit operation.

b) Stop-down lever in use

When the stop-down switch turns on, the aperture magnet control circuit is not operated after shutter release.

Figure 9 TTL flash output control circuit

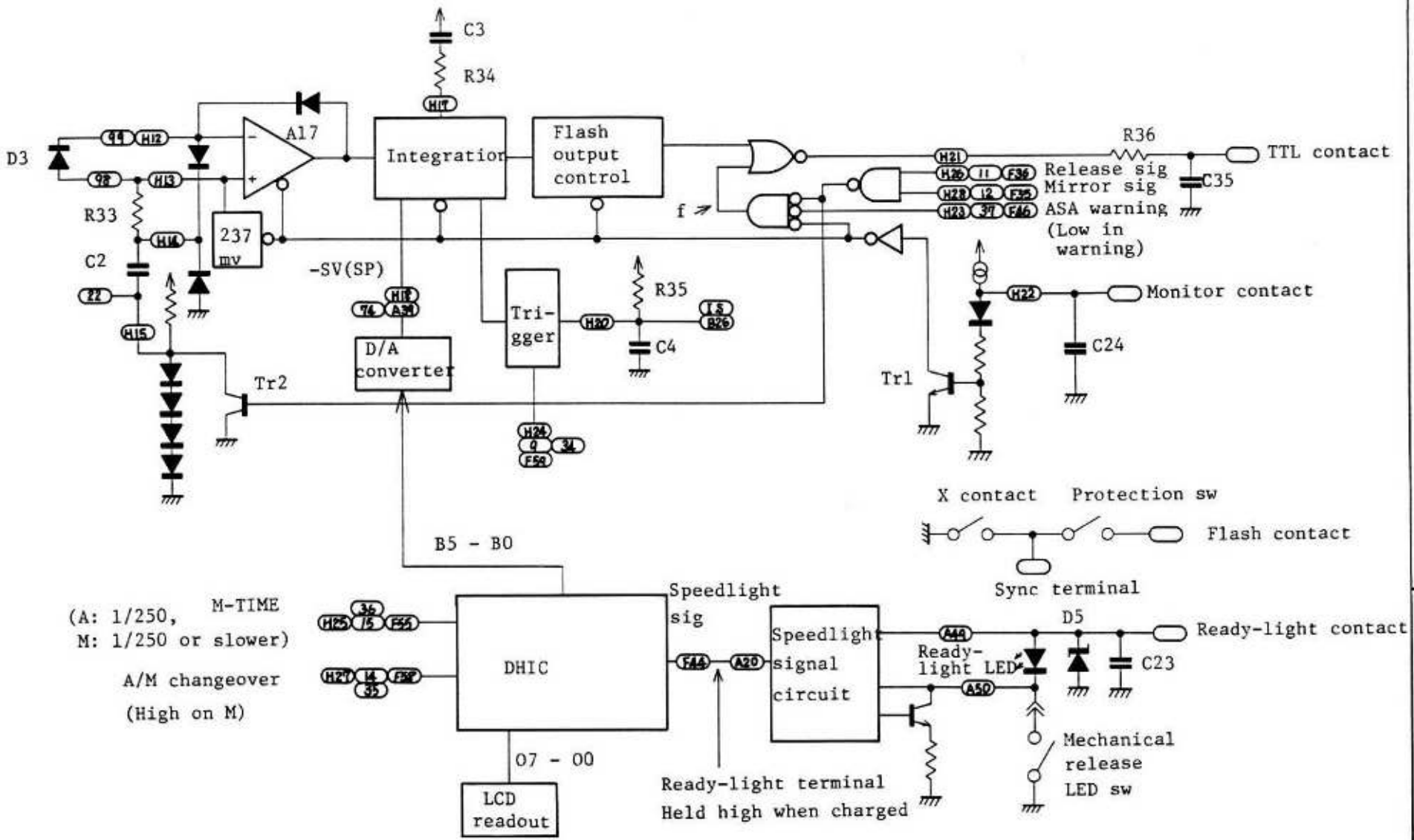

FAA16001-R.3130.A

5 TTL FLASH OUTPUT CONTROL CIRCUIT

CONDENSERs C23, C24 and C25 are equipped with the ready-light contact, monitor contact and TTL contact to eliminate noises of the speedlight.

Ready-light interfase

Turning the power switch of the speedlight on supplies current flow from the ready-light contact, and the speedlight signal of TERMINAL A20 (output of the speedlight signal circuit) turns high.
DHIC turns to speedlight mode and the A/M changeover signal of TERMINAL F58 turns high to be manual shutter speed. On A, S and P modes, LCD readout indicated "250" and M-TIME is fixed st 1/250sec. On M mode, M-TIME becomes 1/250sec or slower till 1sec and LCD readout indicates "M250" - "M1" accordingly. When shutter dial is set between 1/4000 and 1/500, M-TIME is 1/250sec and LCD readout indicates "M250". When the speedlight is charged, current of 2.5 - 7mA is supplied to light the ready-light LED up.

TTL flash output control interface

The monotor contact sets the analog circuit to the TTL mode and identifies that the camera can be used on TTL mode.
The voltage of the monitor contact is approx. 1.5v while battery power is supplied to Vcc2. When the SB-15 or 16 is attached, the voltage of the monitor contact becomes 1.1v or more to turn TRANSISTOR Tr1 off and the input of the inverter turns high (but the output turns low).

As the release signal and mirror signal are inputted into NAND gate, the NAND output turns high when either the release signal or the mirror signal remains low. The ASA warning signal is inputted into TERMINAL A23 and it turns high when ASA dial is set to between 640 and 16. The potential of Point f in Figure 9 turns high when the inputs of three gates turn low, that is; 1) before shutter release or after mirror down, 2) ASA dial is set to 12 or less, or 800 or more, 3) TRANSISTOR Tr1 is turned off.
When the potential of Point f turns high, the output of NOR gate turns low to make the output of the TTL contact low. The X contact is not turned on but the TTL contact in turned low. Then the current flow of the ready-light LED is intermitted to warn that the ASA dial setting is out of range.

When checking the camera without the speedlight, short-circuiting the monitor circuit turns TRANSISTOR Tr1 off to set the camera in the same condition as the speedlight attached. Since the output of the NOR gate is an open collector, the TTL contact should be pulled up when observing the wave form of the output of the TTL contact.

TTL flash output control

Turning TRANSISTOR Tr1 off operates REFERENCE OP AMPLIFIER A17, integration circuit and flash output control circuit.
By shutter release, the shutter release signal is turned low. The output of NAND gate turns high to make TRANSISTOR Tr2 be in operation and the latch release of the TTL flash senser SPD (D3) is executed by charge of CONDENSER C2.
The D/A converter output of TERMINALs A39 and H18 after mirror rise is set to -SV(SP) which is the ASA film speed data for TTL flash output control by MCU inside DHIC.
Turning the trigger switch off makes the trigger signal low, and then the triggering of integration is executed after 4.1ms. In the integration circuit, CONDENSER C3 is charged by the metering output of OP AMPLIFIER A17 and the D/A converter output -SV(SP) of TERMINAL H18.
When the level of CONDENSER C3 reaches proper value, the output of the flash output control circuit turns high and the output of NOR gate turns low. Thus the output of the TTL contact turns low to stop firing of the speedlight.

6 DIGITAL HIC (INPUT)

Multiplexer input

The muliplexer is used to add input terminals of MCU.
PORT K is a 4-bit input port of MCU and it is connected to the accumulator (MCU calculation resistor).
PORT P is a 4-bit output port of MCU and the data in the accumulator is supplied from PORT P.
The output of the port decoder is changed from 6 to $E by the output of PORT P, and one of the gate circuits 6 - $E is selected. 4-bit output of the selected gate circuit is inputted into PORT K of MCU.

Example:

When reading the lens speed data, set the output of PORT P to 7 and make the gate circuit 7 ENABLE. The gray code inputs of (AVO)3 - (AVO)0 are inputted into the accumulator of MCU via PORT K. These inputs are converted to binary by ROM of MCU and are used for the metering process, the LCD readout process and control value calculation.

The following data are inputted into MCU via the gate circuit.

1) Aperture in use AV-AVO (5-bit), 2) Film speed (5-bit),
3) Lens focal length fmm (2-bit), 4) Inspection input (1-bit)

Also, the output of the sequential comparison comparator C3 - C7 are inputted into MCU as metering data by the gate circuits $C and $D.

The following inputs are fed into MCU with being latched via the input circuit.

1) Shutter speed TV (4-bit), 2) Mode switch (2-bit),
3) Blank shots switch (1-bit), 4) Speedlight signal (1-bit),
5) Stop-down switch (1-bit)

These inputs and the EE lens switch (D) can be checked by AMP tester.

MCU input

EE lens switch (D)

EE lens switch (D) is inputted into TERMINAL R8 of MCU.
It turns on with an AI-type lens mounted and turns off with an AI-S type.

SI

The meter mode switch turns on in centerweighted metering and TERMINAL SI turns low. To realize AMP metering, TERMINAL SI should be high.

Figure 10 Digital HIC (input)

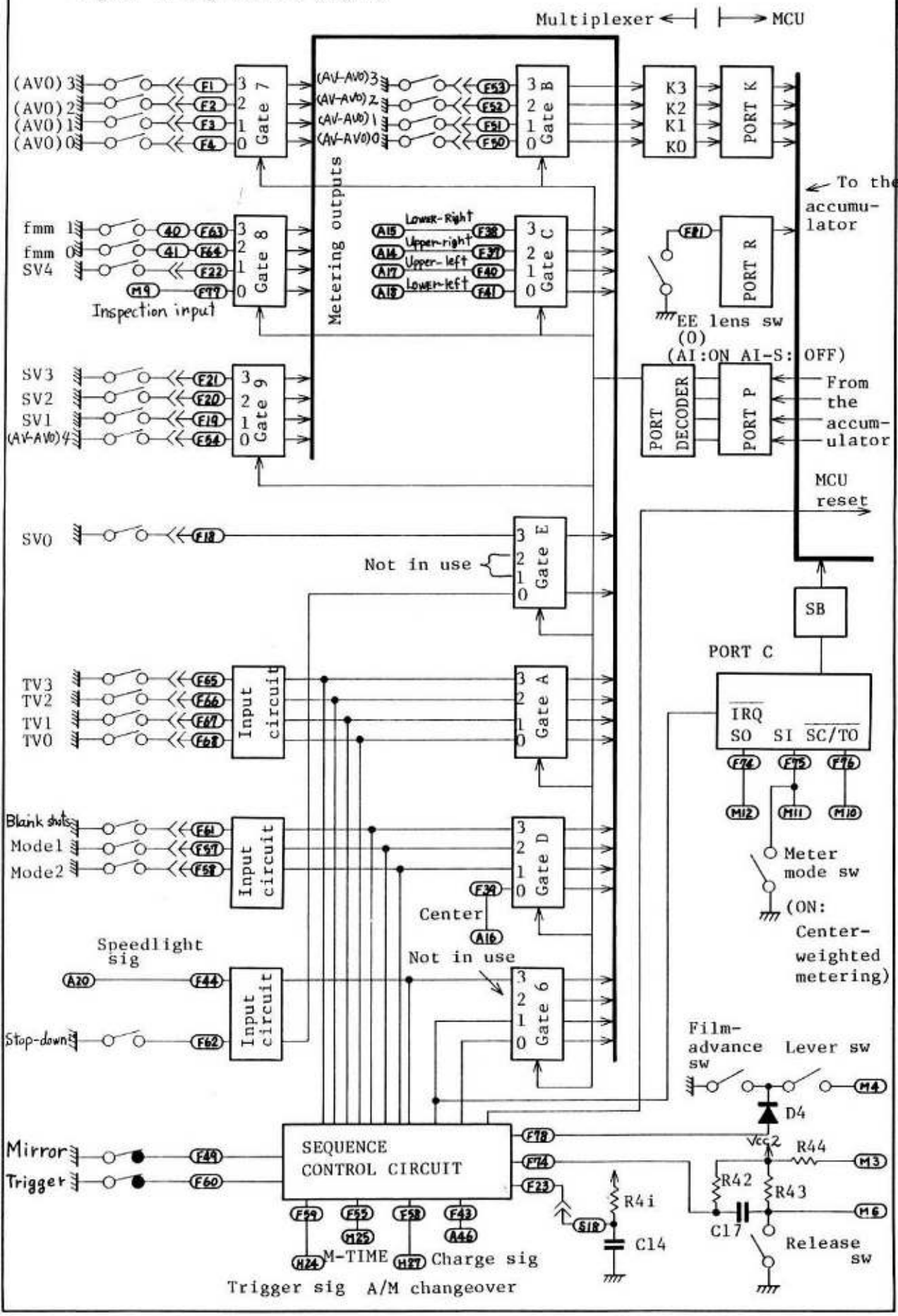

The SI terminal is also used as a serial input to enable the display of the RAM reading or the inspection of MCU when using the AMP tester.
When the inspection input M9 turns low (the SI terminal remains low), the AMP tester selects the AMP mode.
If the SI terminal is short-circuited, the AMP tester is impossible to select the mode between the AMP and centerweighted modes when the SI input to $0.

7 DIGITAL HIC (OUTPUT)

7-1 MCU outputs

The output of MCU are turned high on reset.

B5 - B0: B5 - B0 of D/A converter are controlled by TERMINALs R5 - R0 of MCU.

Mode signal A: After shutter release, the mode signal A turns low when aperture is controlled and turns high when aperture is stopped down to the f-number in set. Also, it is turned low after mirror rise and is turned high by MCU reset.

Mode signal B: After shutter release, the mode signal B turns high in aperture control on P mode and turns low in aperture control on S mode or when aperture is stopped down to the f-number in set.
Also, it is turned low after mirror rise and is turned high by MCU reset.

Release signal: By turning the release signal on, the interuption signal is provided with IRQ of MCU from the release input signal. After the mode signals A and B, and B5 - B0 are controlled, the release signal is turned low by controling the port decoder. After mirror rise, the release signal is turned high after turning the mirror signal low.

Mirror signal: When the mirror switch is turned off by mirror rise, the mirror signal is inputted into MCU via the MPX mirror signal to be turned low.
The mirror signal is turned high after MCU reset.

Stop-down ENABLE: After the release signal turns low, the stop-down ENABLE turns high after approx. 11ms to enable the aperture magnet control circuit to be in operation. Then the stop-down ENABLE is turned low by mirror rise.
When aperture is controlled to the full aperture the stop-down ENABLE is turned high after approx. 3ms from turning the release signal low.

ASA warning signal: When ASA dial is set to 12 or less, or 800 or more during the ready-light charging, the ASA warning signal is turned low.

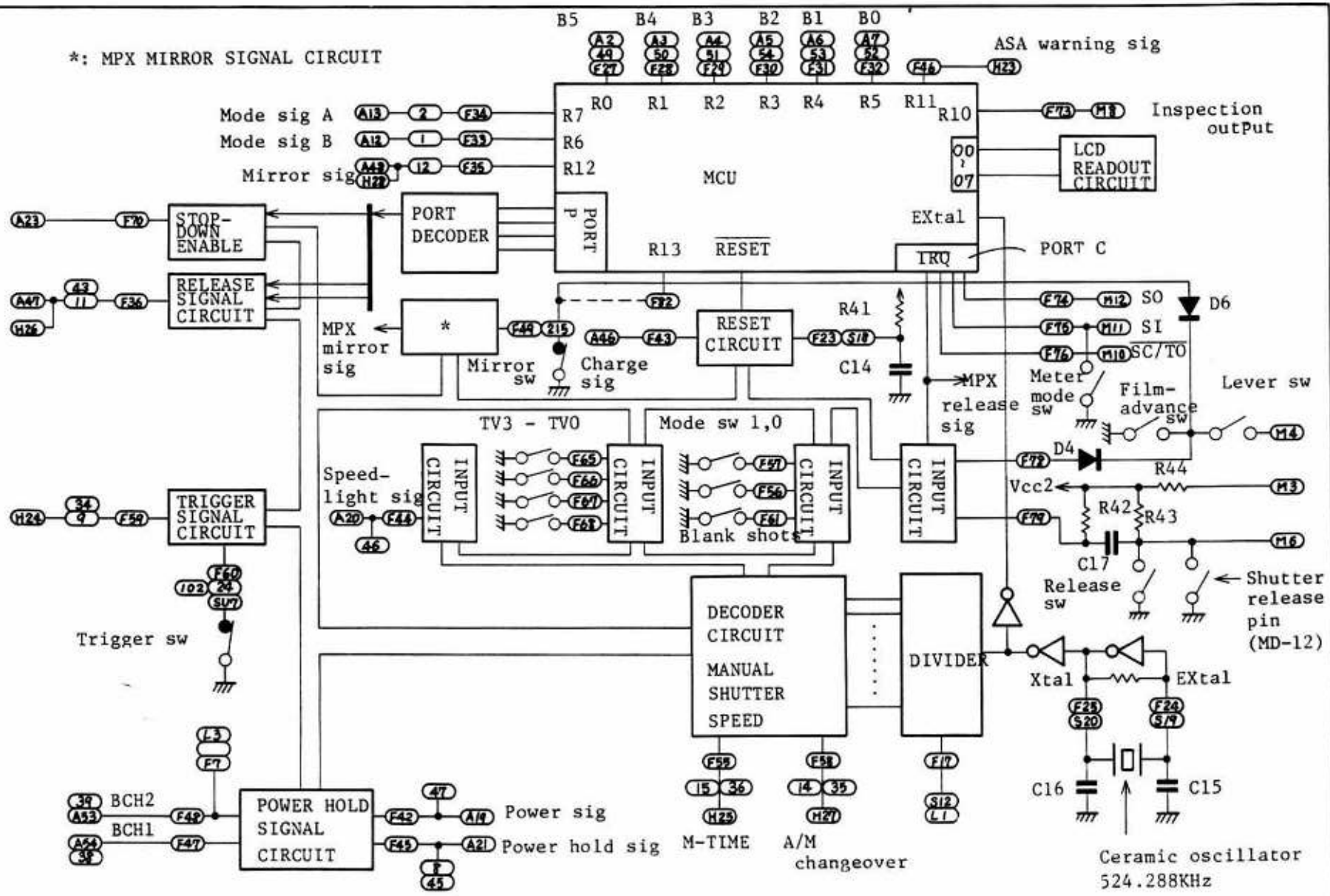

Figure 11 Digital HIC (output)

FAA16001-R.3130.A

Mirror switch protection signal (R13):

After the power switch is on, MCU is reset and the mirror switch protection signal turns low when turning the charge signal low. After shutter release, the mirror switch protection signal turns high after 3ms from turning the stop-down ENABLE high. Then it turns low again after MCU reset.
The mirror switch protection signal is connected with the mirror switch to prohibit the reverse of the mirror switch.

O7 - O0: O7 - O0 are 8-bit outputs to control the LCD readout circuit. These outputs are held high during power on reset and the LCD readout is not appeared.
After display control, the LCD readout is appeared by the outputs. Outputs O7 - O0 are turned high again after shutter release and the LCD readout is turned off.

Inspection output: When setting the AMP tester to the AMP mode with setting the inspection input to low and the SI input to $0 or low, the inspection output becomes a synchronizing signal to read the serial output of SO.

$\overline{SC}/\overline{TO}$: A clock to read SO.

SO: A serial output.

7-2 DIGITAL IC OUTPUT

The digital IC output provides the sequence control for the following operations that are not fit to the control by the MCU.

Power hold signal: Refer to the pertaining section of 1 POWER CONTROL CIRCUIT.

Trigger signal: The trigger signal turns low when the trigger switch turns off, and turns high after mirror down.

Charge signal: The charge signal is turned high shortly after the power turns on. After 62.5ms from power on reset time (approx. 30ms), the charge signal turns low. The signal turns high after mirror down and then turns low after approx. 65ms. When the charge signal remains high, quick charge is executed in both the release magnet control circuit and the aperture magnet control circuit.

$\overline{2048}$: $\overline{2048}$ divides the output of the ceramic oscillator to compose a clock (2048Hz) of the LCD readout circuit.

A/M changeover signal: The A/M changeover signal turns low on A, S and P modes and turns high on M mode. When the blank shots switch turns on or the speedlight signal turns high, the A/M changeover signal turns low even on A, S and P modes.

M-TIME: M-TIME turns high at mirror rise and turns low after the trigger signal turns low.
Time counting is executed by dividing the output of the ceramic oscillator.

1) A, S and P modes

M-TIME becomes 1/4000sec and functions as highest-speed limiter. M-TIME becomes 1/250sec when the blank shots switch turns on or the speedlight signal turns high.

2) M mode

M-TIME becomes the proper shutter speed according to the shutter speed in set. M-TIME becomes 1/250sec when the blank shots switch turns on.
When the speedlight signal remains high, M-TIME becomes 1/250sec or slower and becomes 1/250sec when the shutter dial is set between 1/4000 and 1/500.

8. WIEWFINDER DISPLAY

8-1 LCD readout circuit

LCD readout circuit is controlled by 8-bit outputs (O7 - O0) of PORT O of MCU. Divided output 2048Hz of the ceramic oscillator is inputted into the LCD readout circuit as a clock. This divied output is fed into the oscillation circuit and further divied into 64 Hz for the LCD drive frequency.

Decoder

The decoder utilizes 6-bit outputs of PORT O to control LCD panel for "M88.8ω".

LCD readout "+", "-"

LCD readout "+" and "-" are controlled separately from the decoder by 2-bit outputs O2 and O1 of PORT O.
LCD readout "+" is displayed when the terminal of O2 is low and "-" when the terminal of O1 is low.

Oscillation circuit

This circuit generates the power VssH -3V against power source of 3V by oscillation 1024Hz of the divider and OSCILLATION CONDENSER C22.

LCD driver

When power voltage is 3V, LCD is driven by rectangular wave form of ±3V. The phase of the common against LCD ON terminal is reversed, and LCD OFF terminal is in phase with common terminal.

LCD readout OFF

When power voltage and BCH2 are low, the EN terminal and eight NOR gate outputs turn low to make LCD readout turn off. Also, the eight NOR gate outputs turn low when the outputs of PORT O O7 - O0 turn high after the MCU reset, and LCD readout is turned off.

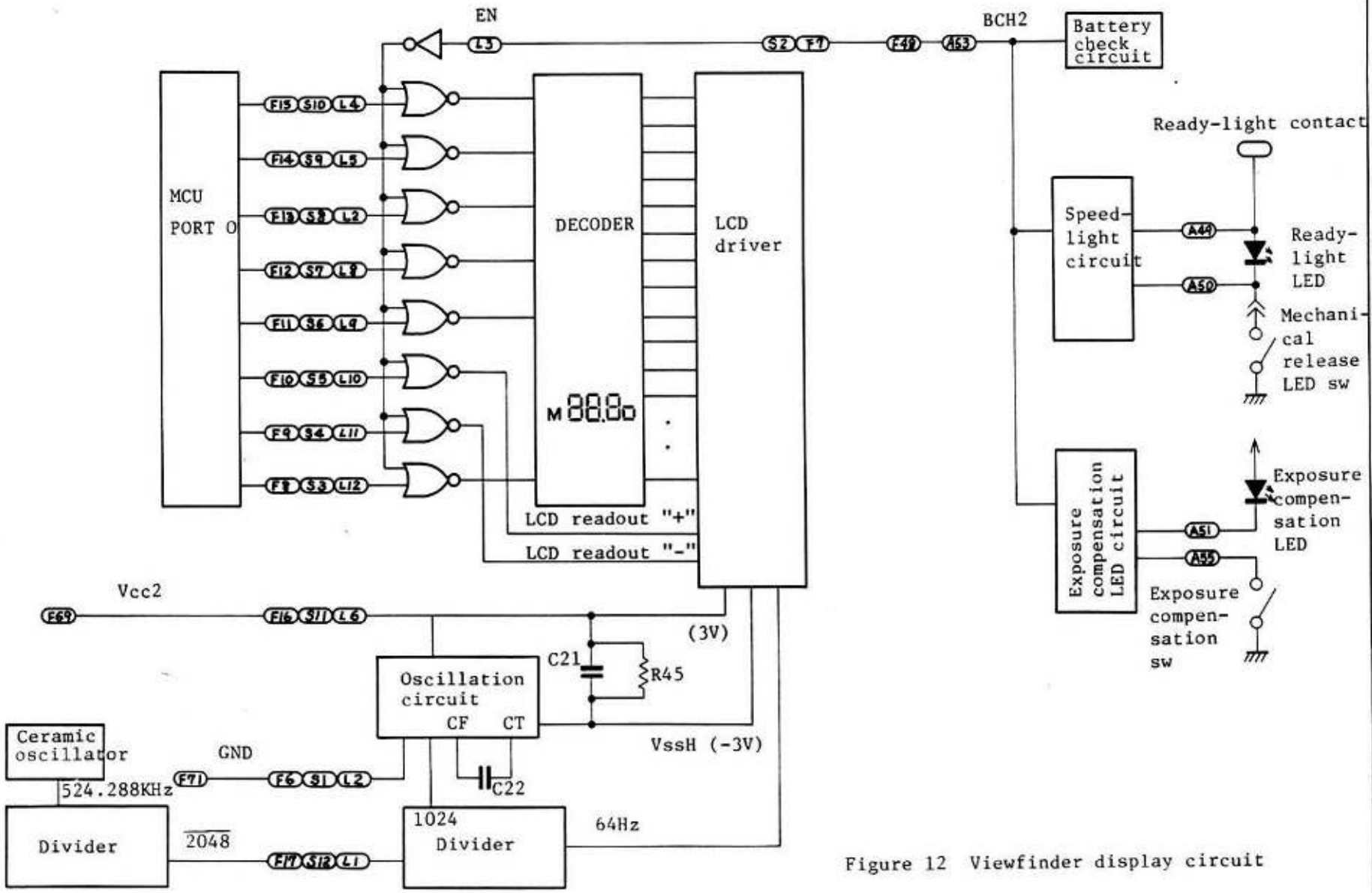

Figure 12 Viewfinder display circuit

8-2 LED drive

Ready-light LED

When BCH2 is high, the terminal A50 is closed and the speedlight unit provides a signal through the ready-light contact to light the LED. Even if BCH2 is low, mechanical release at B or M250 allows the mechanical release LED switch to be on and to enable the LED lighting.

Exposure compensation LED

When BCH2 is high, turning Exposure compensation switch on closes the terminal A51 and makes the LED light up.

9 RELEASE SIGNAL FLOW

* MPX mirror signal circuit

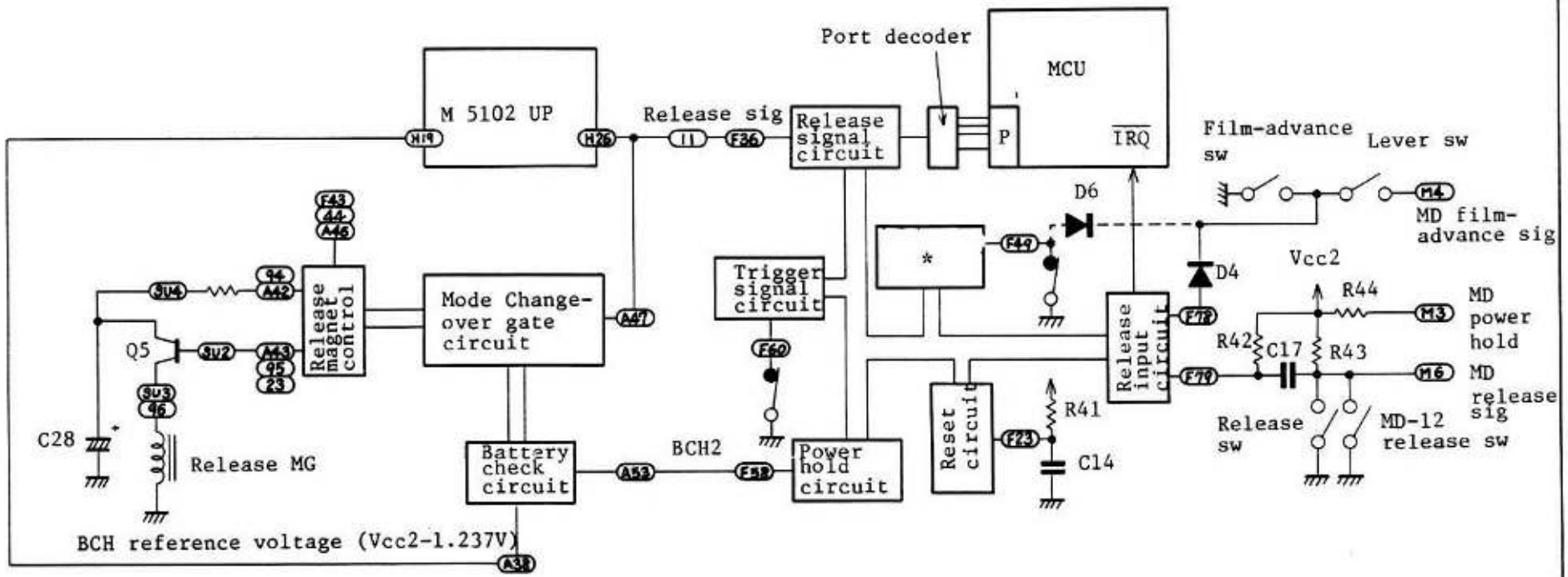

CONDENSER C28 should be charged before shutter release to activate the release magnet.

MCU release signal output condition

1 Mirror switch: ON

2 Ceramic oscillator: CHARGED

IRQ enabled condition (Release switch: ON, F79: LOW)

1 Film-advance switch: OFF, F78: HIGH

2 Power on: RESET, F23: HIGH

3 BCH2: HIGH

4 Trigger switch: ON

Figure 13 Relaese signal flow

TROUBLESHOOTING FLOWCHART

Tools: Oscilloscope, Digital voltmeter, Tool battery

Precaution:

1) Set the mode selector to A mode unless any instruction is given.

   Measure the resistor value when "RESISTOR" is indicated.

   The arrows on wave lines indicate up and down at start of the measurement of the signal.

2) Measure the resistor value when checking the conductivity.

3) Set the range of Oscilloscope to 5 or 10 ms/DIV, and 0.1 v/DIV unless any instruction is given.

4) Use AMP tester to read out the gray codes of ASA, f-fo, fo and TV.

5) Remove the silicon coating on the check land.

6) Iccl is an operative current when the power switch on.

7) Provide checks for the TTL flash output control after and before removing the top cover.

8) Abbreviations:

   C: Condenser, R: Resistor, RV: Variable resistor,

   MG: Magnet, SIG: Signal COM: Common

1 SHUTTER FAILS TO BE RELEASED

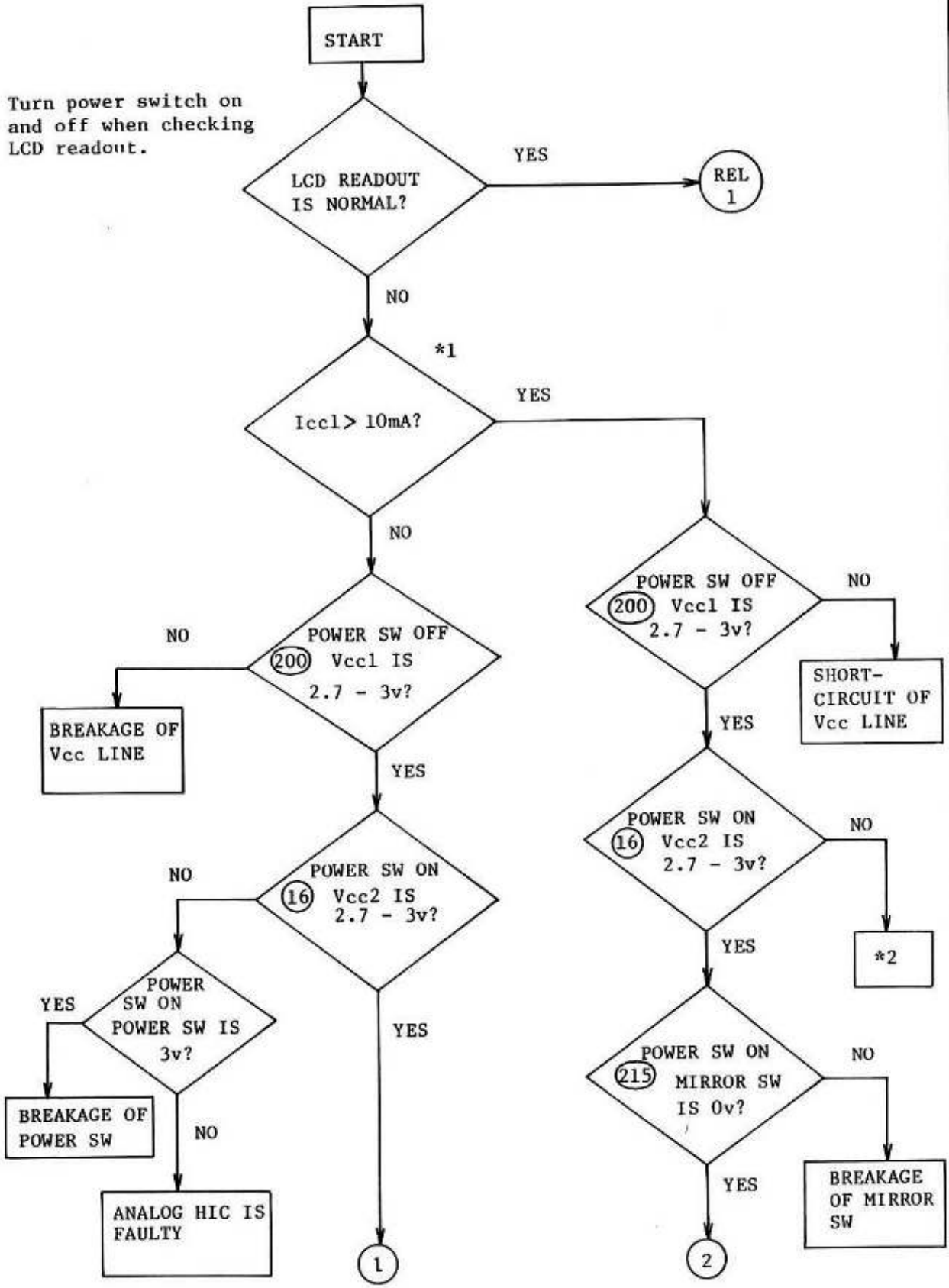

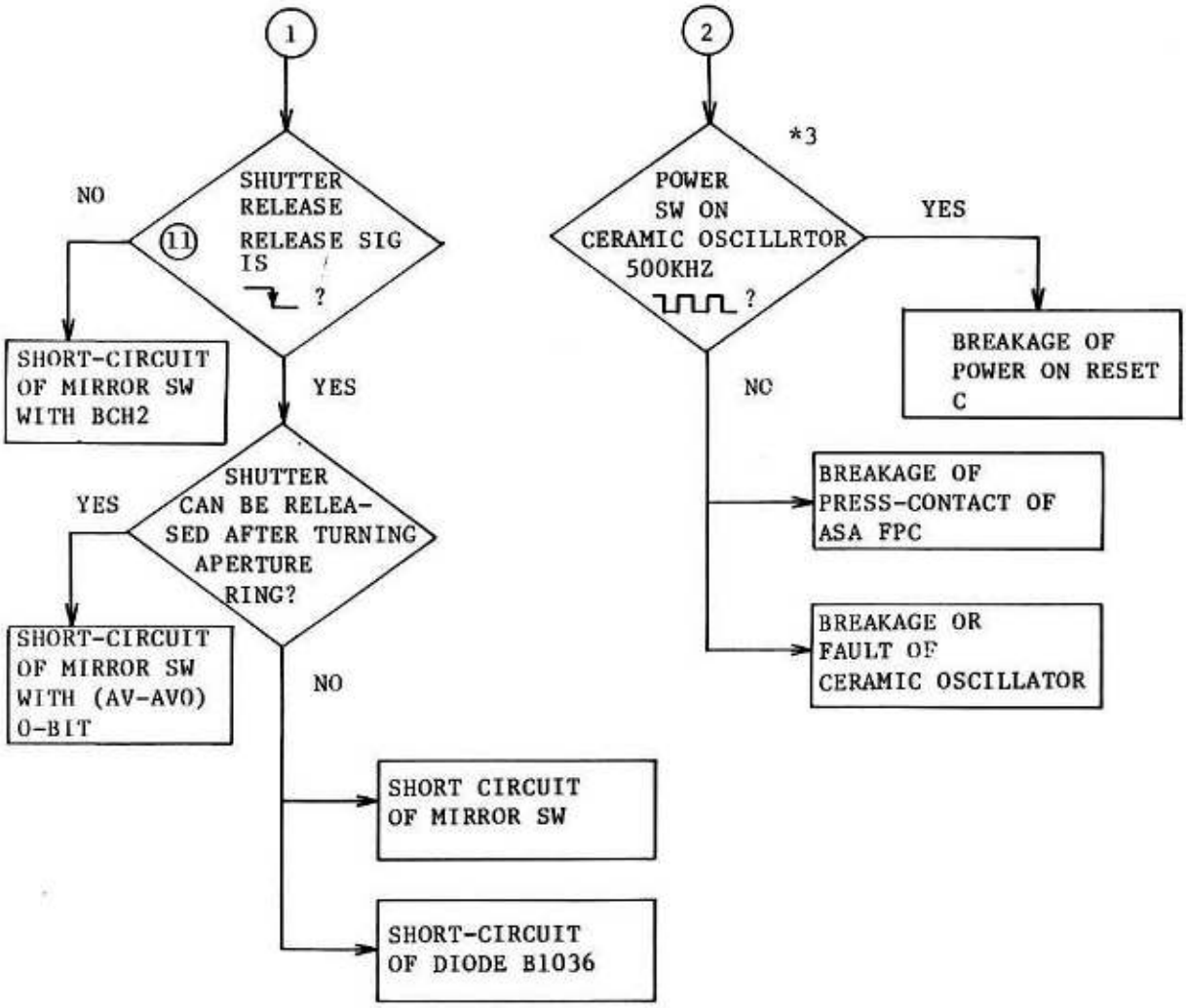

Turn power switch on and off when measuring the release signal.

*1: Since Iccl varies for each camera, measure Iccl at both steps when the value is around 10mA.

*2: SHORT-CIRCUIT OF LCD BASE PLATE WITH Vcc2, SHORT-CIRCUIT OF PASS C

*3: The oscillation can be checked by M- 10 $\overline{SC}/\overline{TO}$ on the MD base plate.

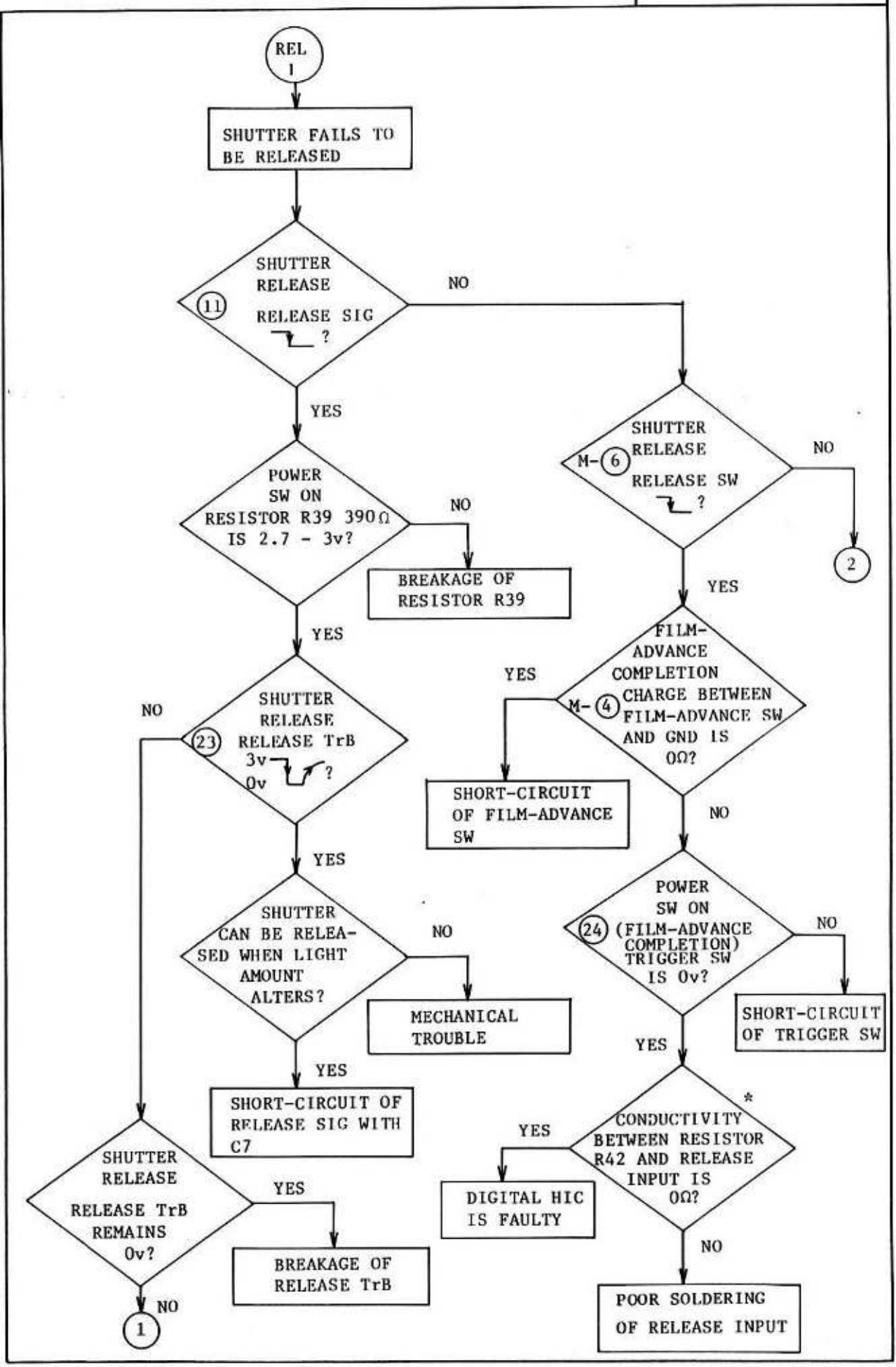
REL 1
SHUTTER FAILS TO BE RELEASED
SHUTTER RELEASE
11
RELEASE SIG ?
NO
YES
POWER SW ON RESISTOR R39 390Ω IS 2.7 - 3v?
NO
BREAKAGE OF RESISTOR R39
YES
SHUTTER RELEASE
23
RELEASE TrB
3v
0v
?
NO
YES
SHUTTER CAN BE RELEASED WHEN LIGHT AMOUNT ALTERS?
NO
MECHANICAL TROUBLE
YES
SHORT-CIRCUIT OF RELEASE SIG WITH C7
SHUTTER RELEASE
RELEASE TrB REMAINS 0v?
YES
BREAKAGE OF RELEASE TrB
NO
1
SHUTTER RELEASE
M-6
RELEASE SW ?
NO
2
YES
FILM-ADVANCE COMPLETION
M-4
CHARGE BETWEEN FILM-ADVANCE SW AND GND IS 0Ω?
YES
SHORT-CIRCUIT OF FILM-ADVANCE SW
NO
POWER SW ON
24
(FILM-ADVANCE COMPLETION) TRIGGER SW IS 0v?
NO
SHORT-CIRCUIT OF TRIGGER SW
YES
*
CONDUCTIVITY BETWEEN RESISTOR R42 AND RELEASE INPUT IS 0Ω?
YES
DIGITAL HIC IS FAULTY
NO
POOR SOLDERING OF RELEASE INPUT

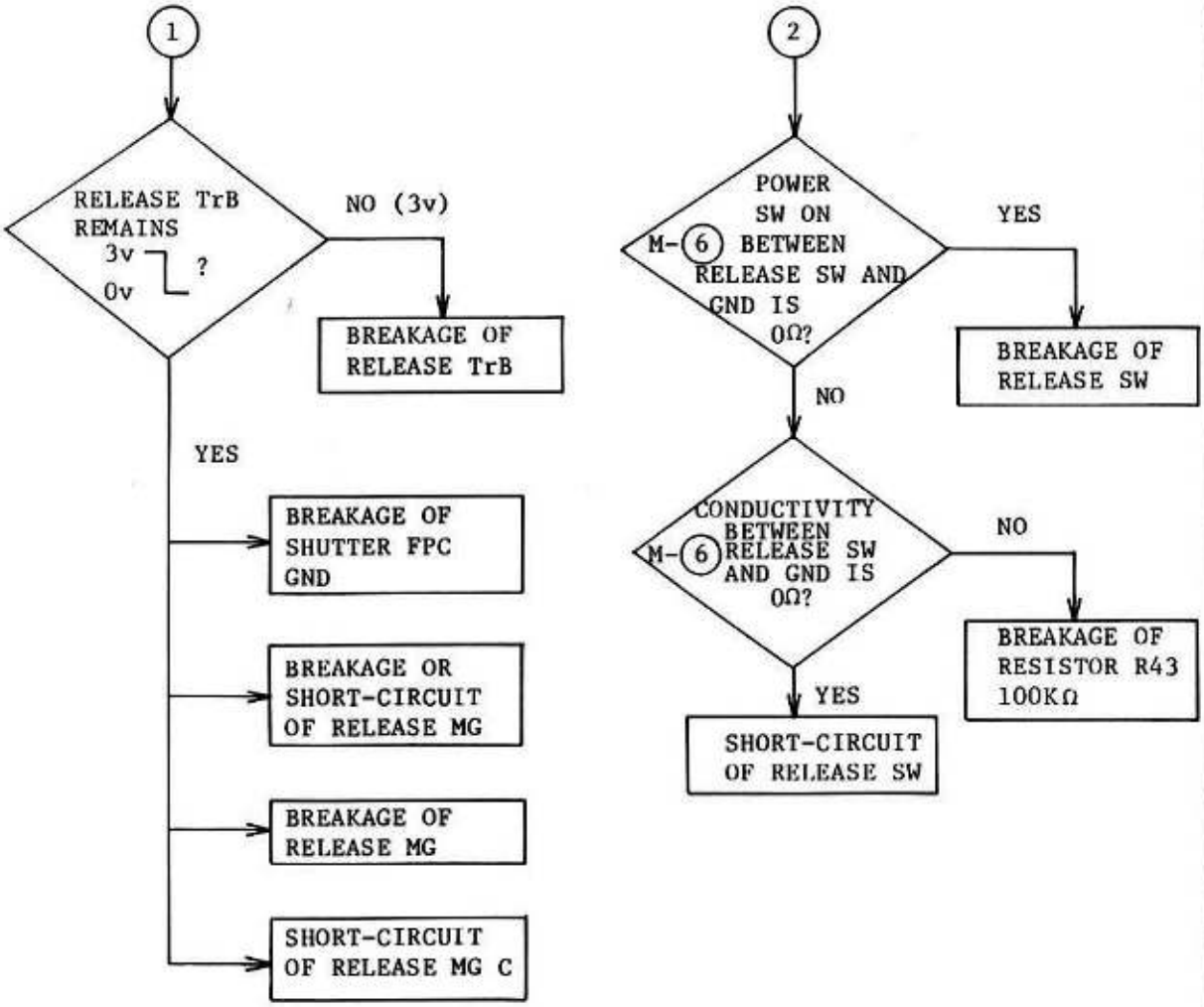

*: Conductivity between RESISTOR R42 of the MD base plate and the release input terminal of Digital HIC.

2 SHUTTER IS HELD OPEN

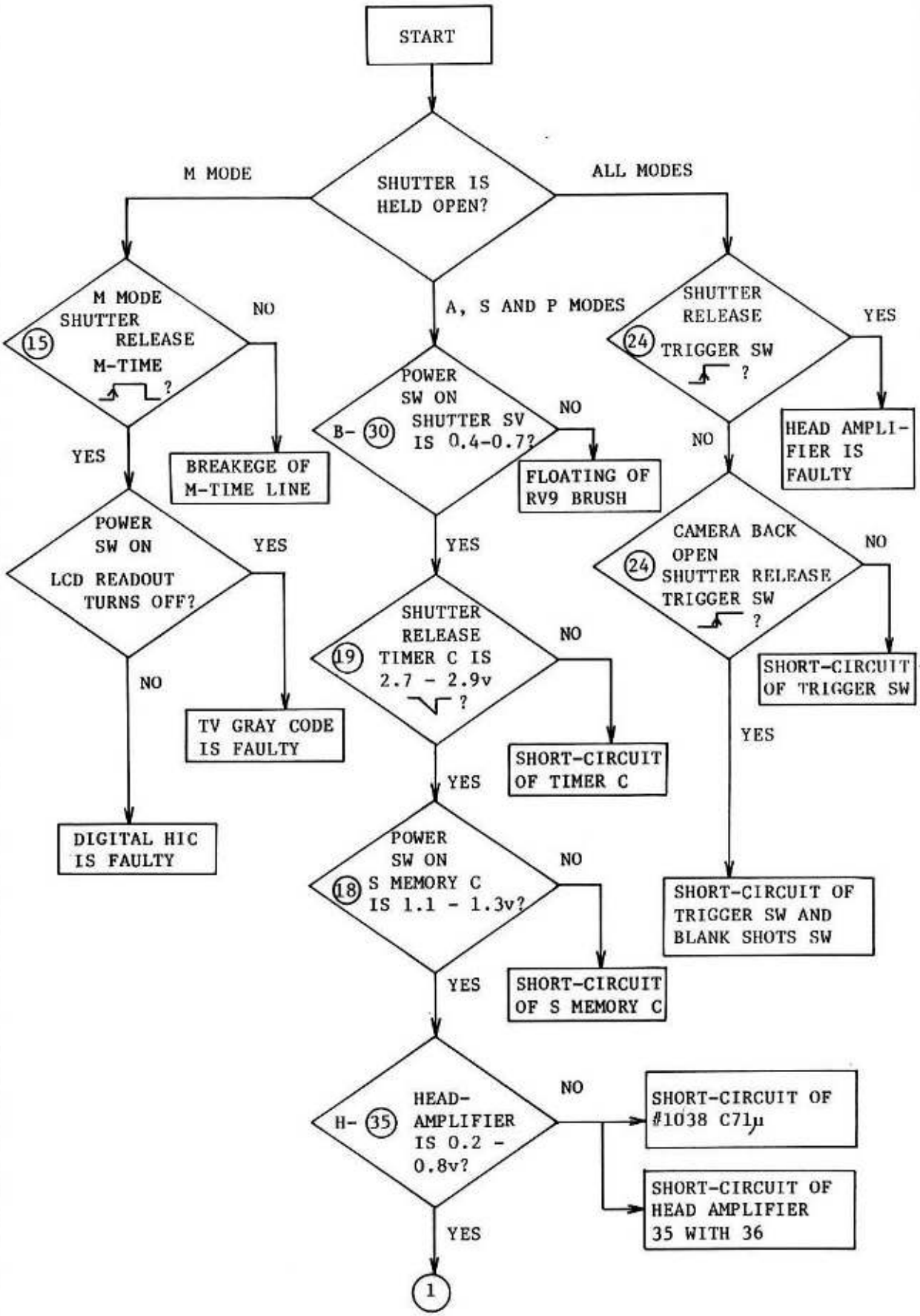

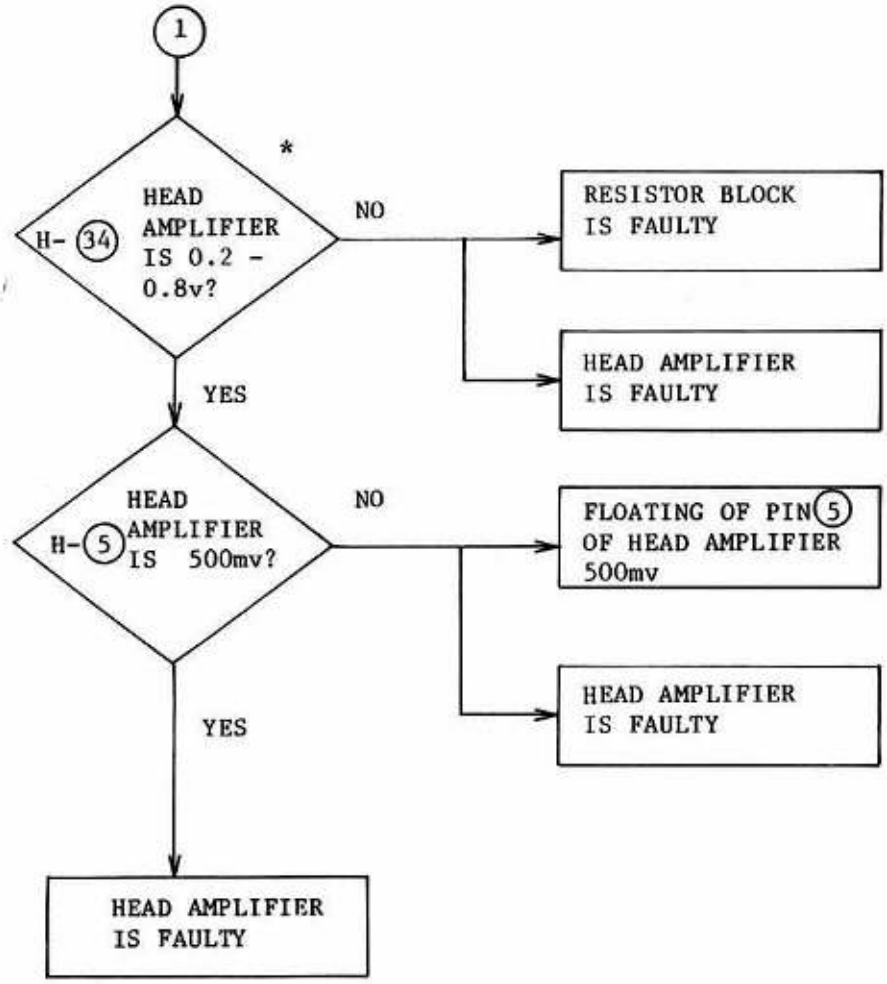

*: Reference voltage is Vcc2.

3 APERTURE FAILS TO BE CONTROLLED ON P AND S MODES

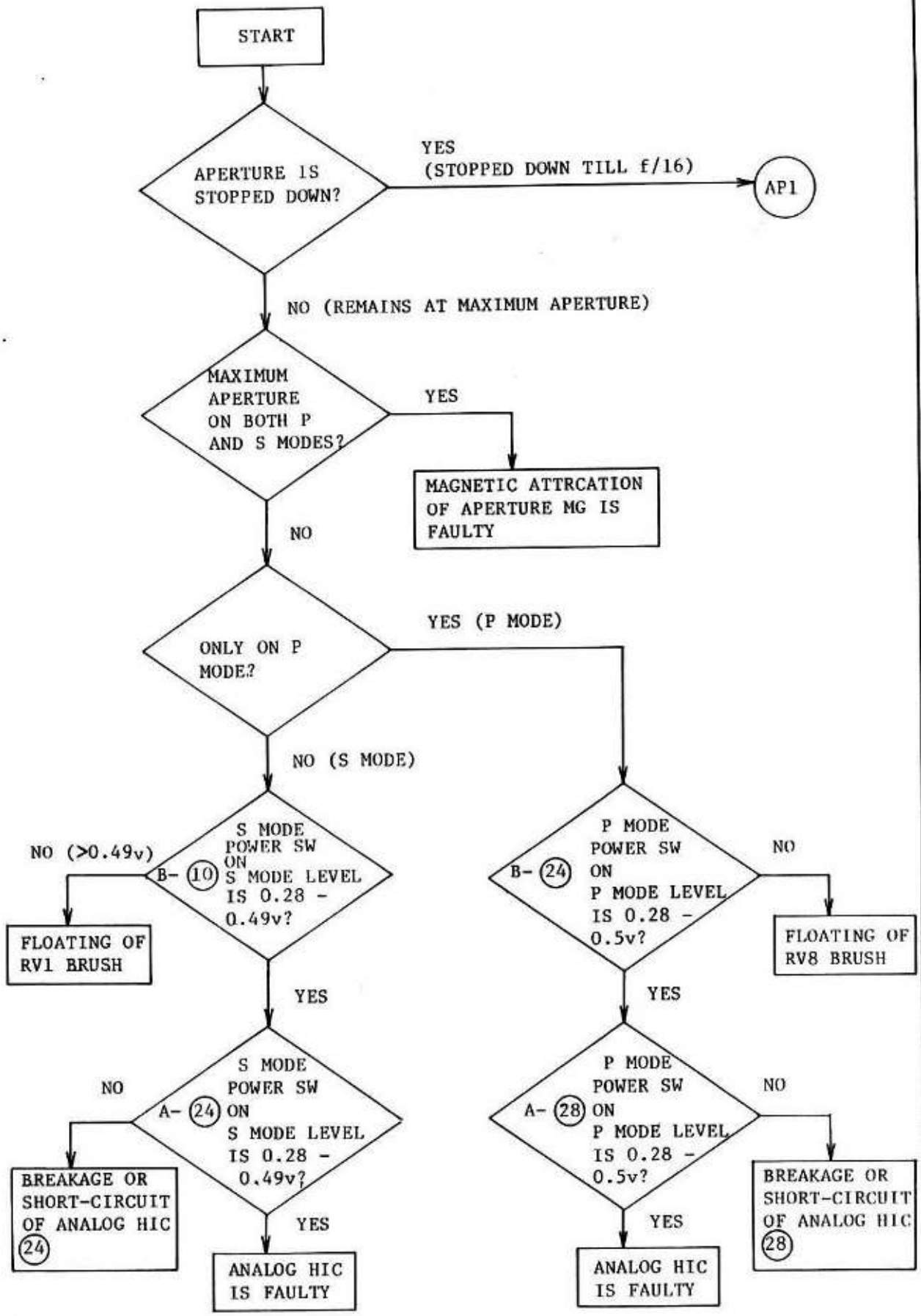

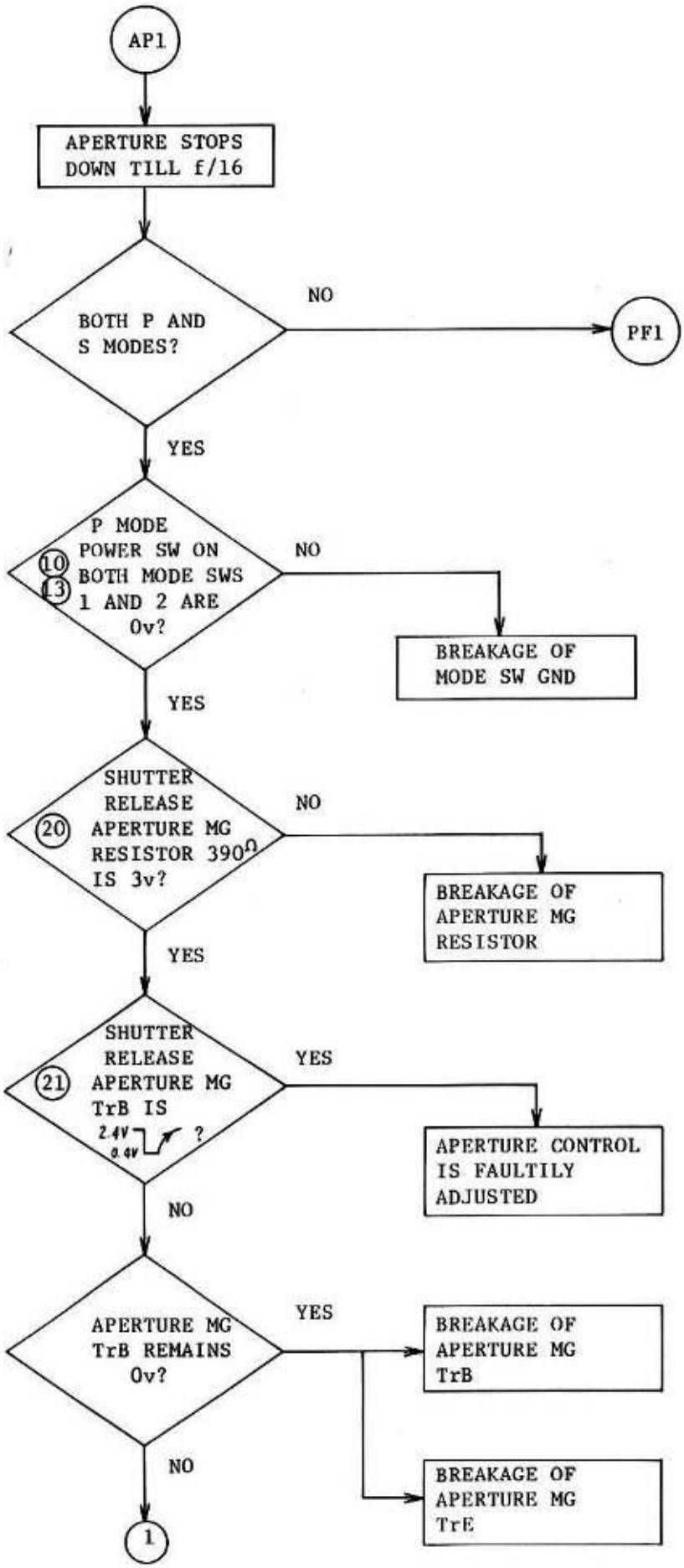
AP1
APERTURE STOPS DOWN TILL f/16
BOTH P AND S MODES?
NO
PF1
YES
10 13
P MODE POWER SW ON BOTH MODE SWS 1 AND 2 ARE 0v?
NO
BREAKAGE OF MODE SW GND
YES
20
SHUTTER RELEASE APERTURE MG RESISTOR 390Ω IS 3v?
NO
BREAKAGE OF APERTURE MG RESISTOR
YES
21
SHUTTER RELEASE APERTURE MG TrB IS
2.4V
0.4V
?
YES
APERTURE CONTROL IS FAULTILY ADJUSTED
NO
APERTURE MG TrB REMAINS 0v?
YES
BREAKAGE OF APERTURE MG TrB
BREAKAGE OF APERTURE MG TrE
NO
1

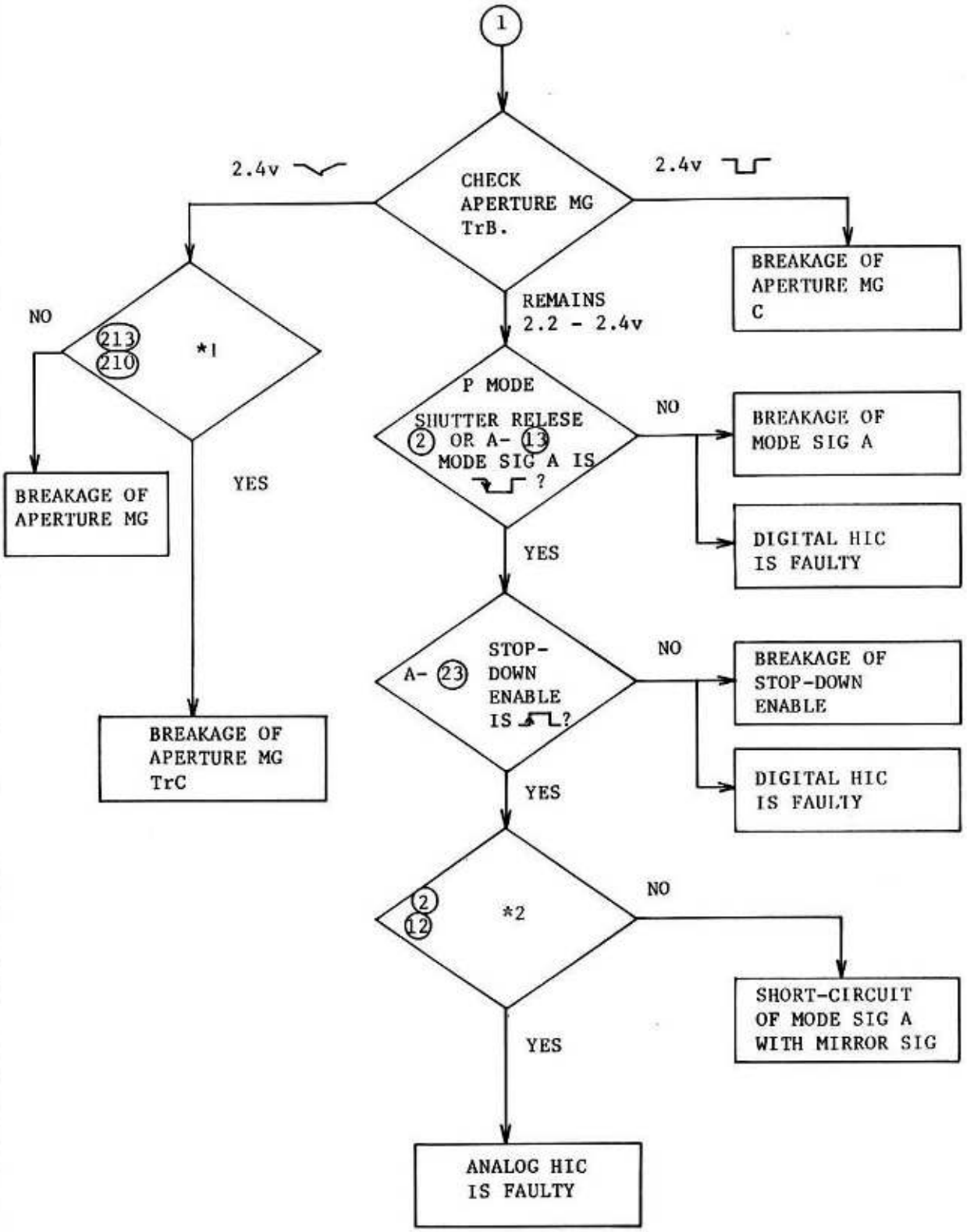

*1: CONDUCTIVITY BETWEEN APERTURE MG LEAD WIRES #1100 AND #1099 IS 0Ω?

*2: P MODE, SHUTTER RELEASE,
MODE SIG A
MIRROR SIG
?

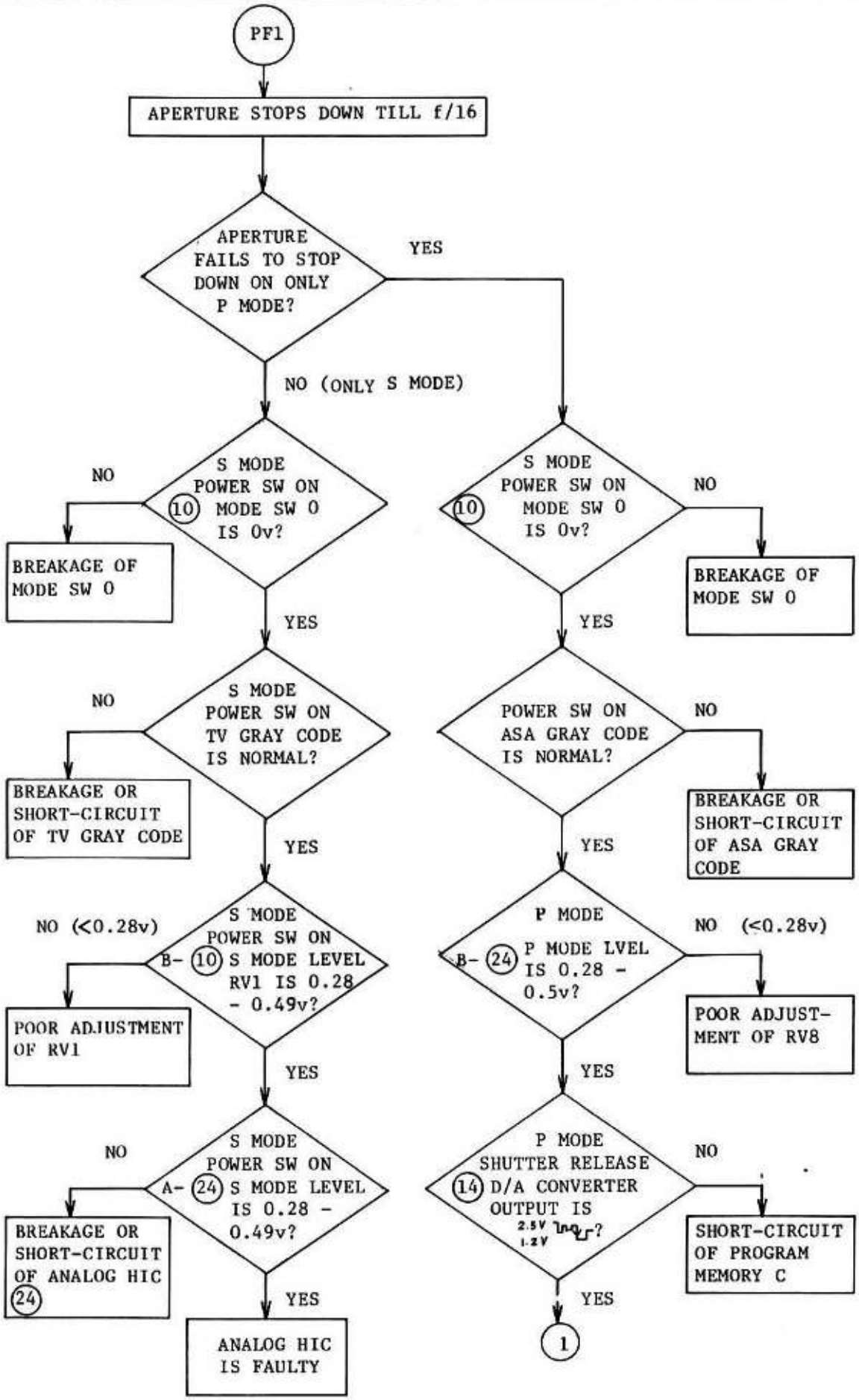
PF1
APERTURE STOPS DOWN TILL f/16
APERTURE FAILS TO STOP DOWN ON ONLY P MODE?
YES
NO (ONLY S MODE)
S MODE POWER SW ON (10) MODE SW 0 IS 0v?
NO
BREAKAGE OF MODE SW 0
YES
S MODE POWER SW ON TV GRAY CODE IS NORMAL?
NO
BREAKAGE OR SHORT-CIRCUIT OF TV GRAY CODE
YES
S MODE POWER SW ON B- (10) S MODE LEVEL RV1 IS 0.28 - 0.49v?
NO (<0.28v)
POOR ADJUSTMENT OF RV1
YES
S MODE POWER SW ON A- (24) S MODE LEVEL IS 0.28 - 0.49v?
NO
BREAKAGE OR SHORT-CIRCUIT OF ANALOG HIC (24)
YES
ANALOG HIC IS FAULTY
(10) S MODE POWER SW ON MODE SW 0 IS 0v?
NO
BREAKAGE OF MODE SW 0
YES
POWER SW ON ASA GRAY CODE IS NORMAL?
NO
BREAKAGE OR SHORT-CIRCUIT OF ASA GRAY CODE
YES
P MODE B- (24) P MODE LVEL IS 0.28 - 0.5v?
NO (<0.28v)
POOR ADJUST-MENT OF RV8
YES
P MODE SHUTTER RELEASE (14) D/A CONVERTER OUTPUT IS 2.5V 1.2V ?
NO
SHORT-CIRCUIT OF PROGRAM MEMORY C
YES
1

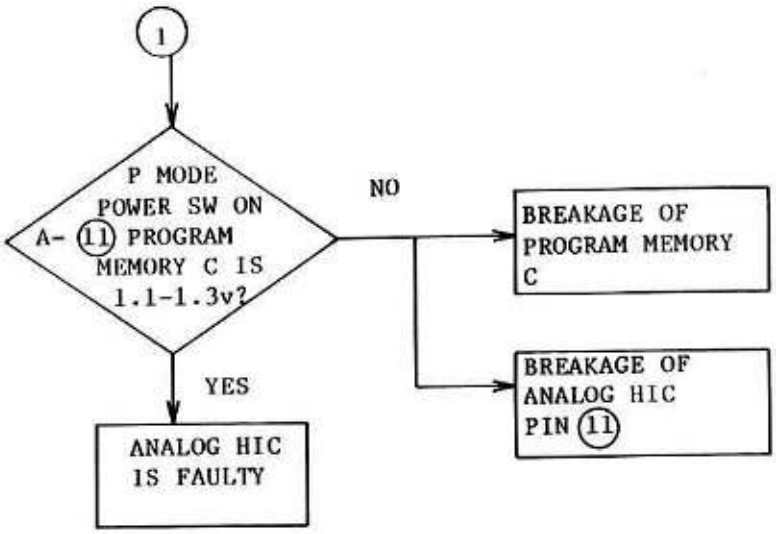
1
P MODE
POWER SW ON
A- 11 PROGRAM
MEMORY C IS
1.1-1.3v?
NO
BREAKAGE OF
PROGRAM MEMORY
C
BREAKAGE OF
ANALOG HIC
PIN 11
YES
ANALOG HIC
IS FAULTY

4 SHUTTER SPEEDS DELIVERY IS FAULTILY HIGH-SPEED

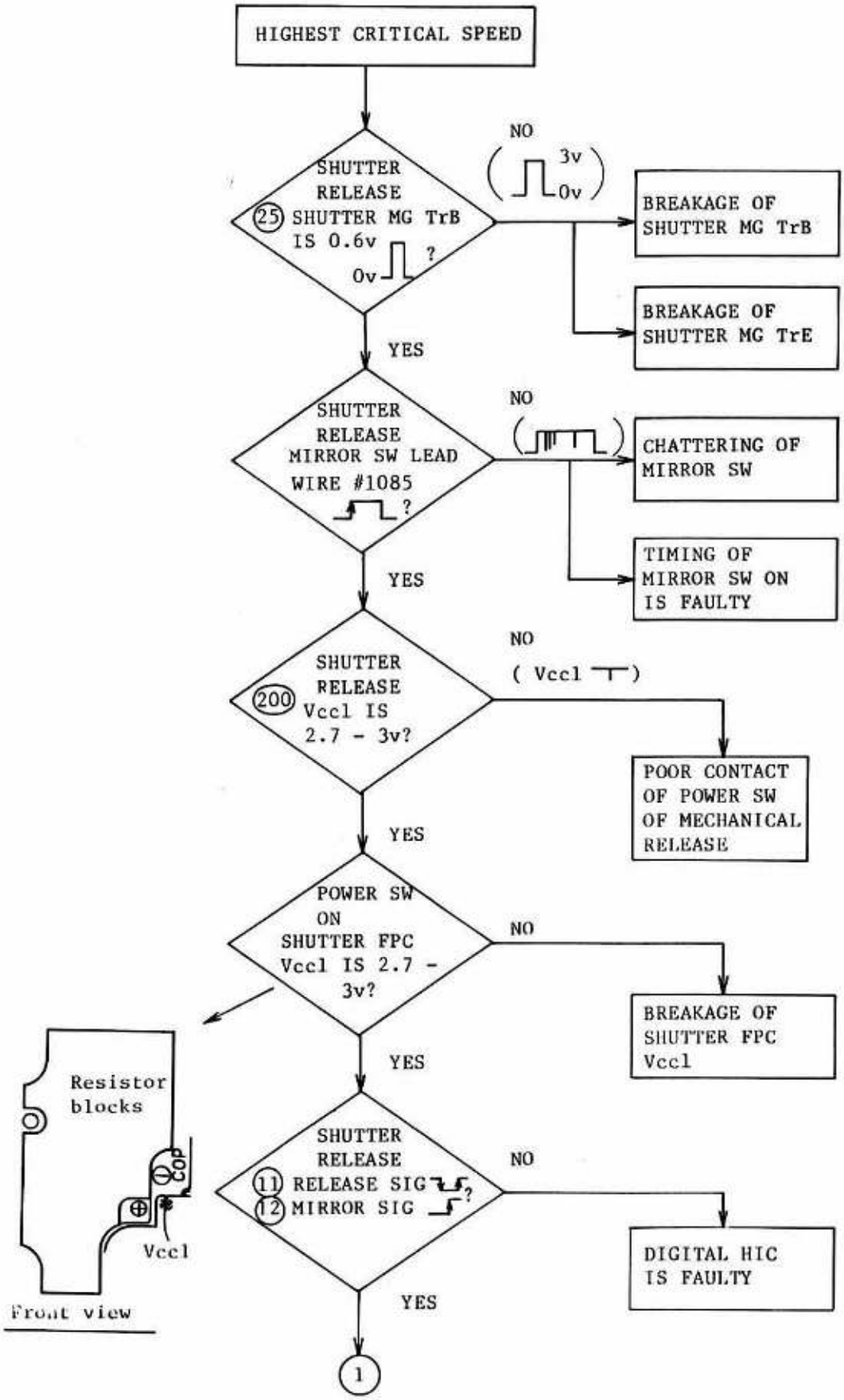

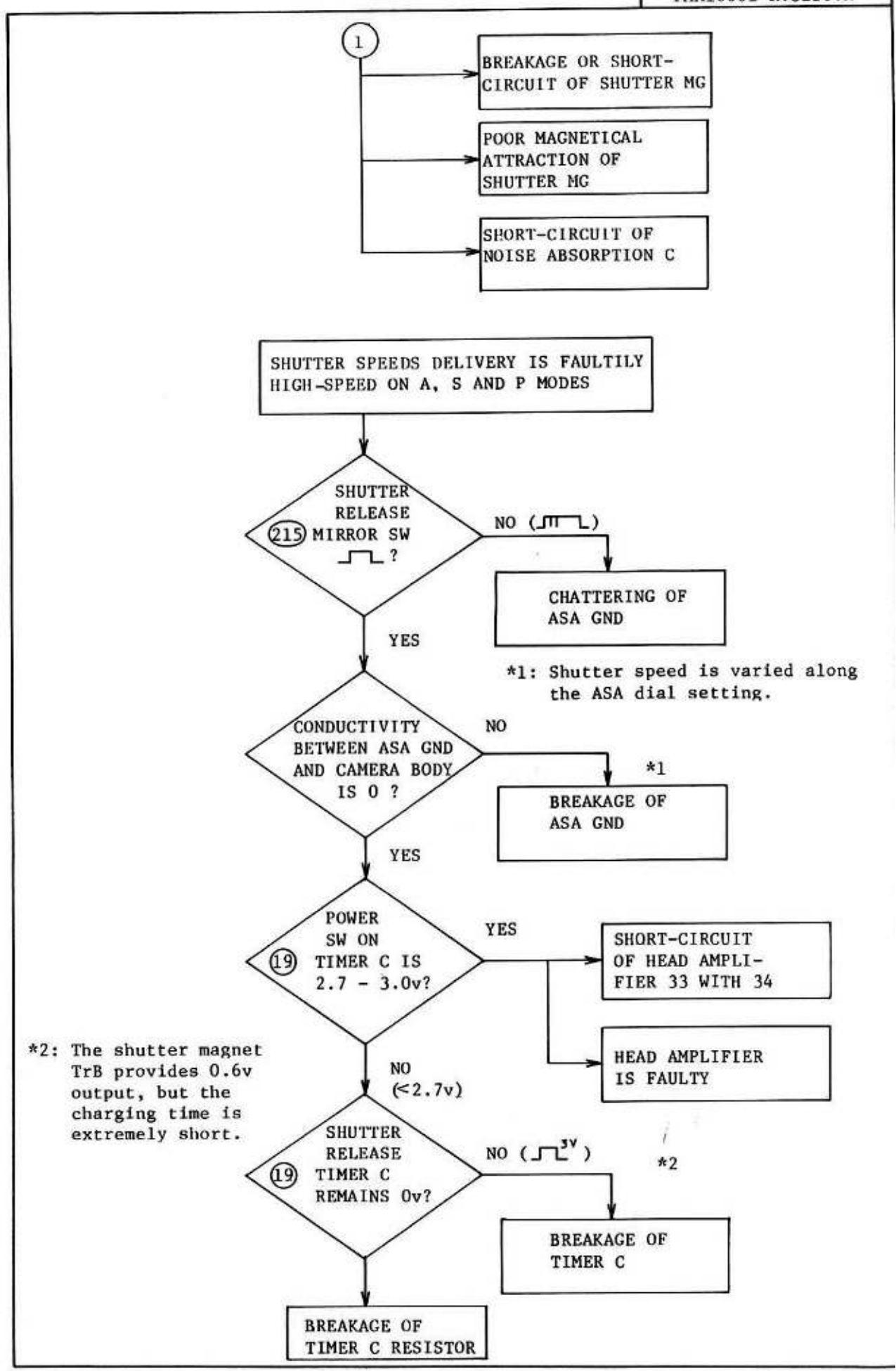
1
BREAKAGE OR SHORT-CIRCUIT OF SHUTTER MG
POOR MAGNETICAL ATTRACTION OF SHUTTER MG
SHORT-CIRCUIT OF NOISE ABSORPTION C
SHUTTER SPEEDS DELIVERY IS FAULTILY HIGH-SPEED ON A, S AND P MODES
215 SHUTTER RELEASE MIRROR SW ?
NO
CHATTERING OF ASA GND
YES
*1: Shutter speed is varied along the ASA dial setting.
CONDUCTIVITY BETWEEN ASA GND AND CAMERA BODY IS 0 ?
NO
*1
BREAKAGE OF ASA GND
YES
19 POWER SW ON TIMER C IS 2.7 - 3.0v?
YES
SHORT-CIRCUIT OF HEAD AMPLIFIER 33 WITH 34
HEAD AMPLIFIER IS FAULTY
*2: The shutter magnet TrB provides 0.6v output, but the charging time is extremely short.
NO (<2.7v)
19 SHUTTER RELEASE TIMER C REMAINS 0v?
NO
3V
*2
BREAKAGE OF TIMER C
BREAKAGE OF TIMER C RESISTOR

5 LCD READOUT FAILS TO OPERATE

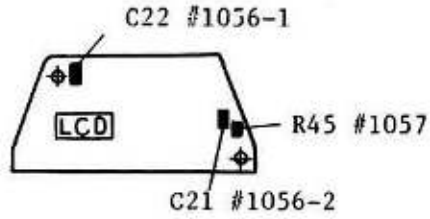

START

LCD READOUT FAILS TO TURN ON?

NO → M MODE TV GRAY CODE IS NORMAL?

*1: Refer to Gray code tables.

M MODE TV GRAY CODE IS NORMAL? NO → *1 → BREAKAGE OR SHORT-CIRCUIT OF GRAY CODE

M MODE TV GRAY CODE IS NORMAL? YES → M MODE PORT O OUTPUTS AGAINST SHUTTER SPEED IN SET ARE 0 - 7?

*2: Refer to LCD readout on A, S, P, M modes, p.E27.

M MODE PORT O OUTPUTS AGAINST SHUTTER SPEED IN SET ARE 0 - 7? NO → *2: → BREAKAGE OR SHORT-CIRCUIT OF PORT O 0 - 7

M MODE PORT O OUTPUTS AGAINST SHUTTER SPEED IN SET ARE 0 - 7? YES → POWER SW ON COM 3v -3v ?

POWER SW ON COM 3v -3v ? NO → (2)

POWER SW ON COM 3v -3v ? YES → COM SEG-MENT ?

COM SEG-MENT ? INVERSE PHASE → POOR CONTACT OF LCD

COM SEG-MENT ? IN PHASE → LCD DRIVER IS FAULTY

COM SEG-MENT ? IN PHASE → CONDUCTIVE RUBBER OR LCD IS FAULTY

LCD READOUT FAILS TO TURN ON? YES → POWER SW ON L-(6) Vcc2 IS 2.7 - 3v?

POWER SW ON L-(6) Vcc2 IS 2.7 - 3v? NO → POOR SOLDERING OF Vcc2 PRESS-CONTACT

POWER SW ON L-(6) Vcc2 IS 2.7 - 3v? YES → POWER SW ON L-(3) Bch2 (EN) IS 2.7 - 3.0v?

POWER SW ON L-(3) Bch2 (EN) IS 2.7 - 3.0v? NO → POOR SOLDERING OFF Bch2 (EN) PRESS-CONTACT

POWER SW ON L-(3) Bch2 (EN) IS 2.7 - 3.0v? YES → CONDUCTIVITY BETWEEN L-(2) VssL AND GND IS 0Ω?

CONDUCTIVITY BETWEEN L-(2) VssL AND GND IS 0Ω? NO → POOR SOLDERING OF VssL PRESS-CONTACT

CONDUCTIVITY BETWEEN L-(2) VssL AND GND IS 0Ω? YES → (1)

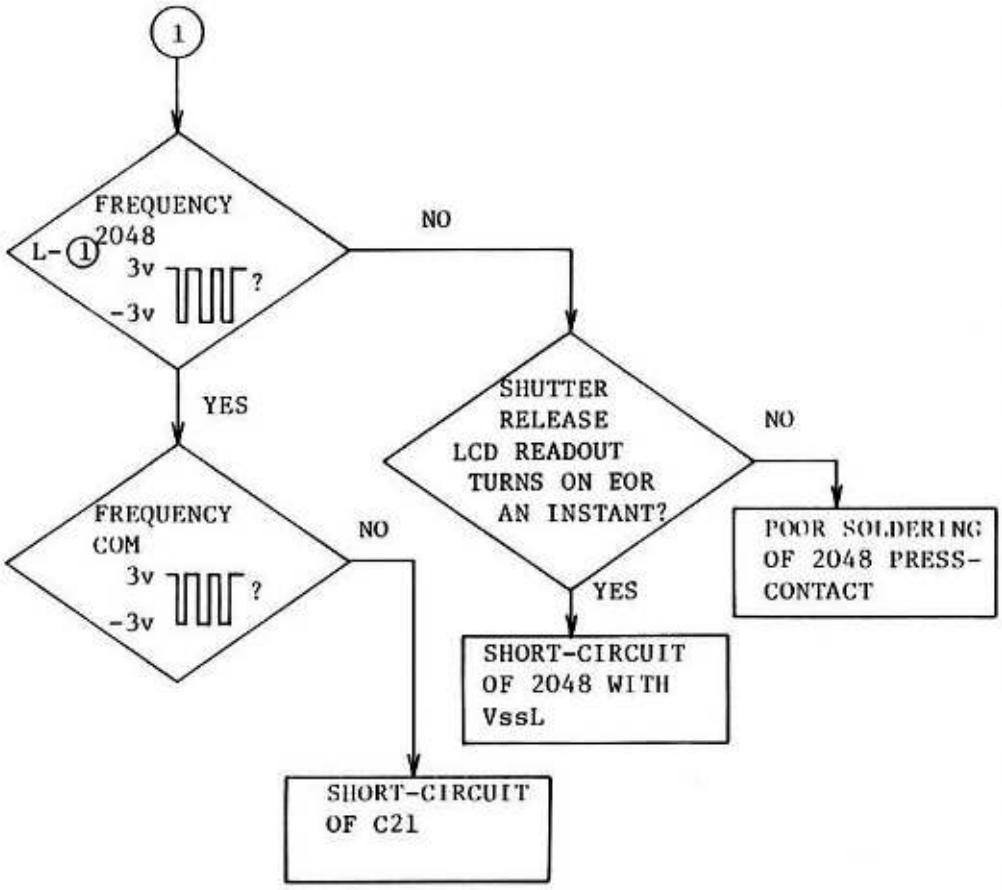
1
FREQUENCY
2048
L-1
3v
-3v
?
NO
YES
SHUTTER
RELEASE
LCD READOUT
TURNS ON EOR
AN INSTANT?
NO
POOR SOLDERING
OF 2048 PRESS-
CONTACT
FREQUENCY
COM
3v
-3v
?
NO
YES
SHORT-CIRCUIT
OF 2048 WITH
VssL
SHORT-CIRCUIT
OF C21

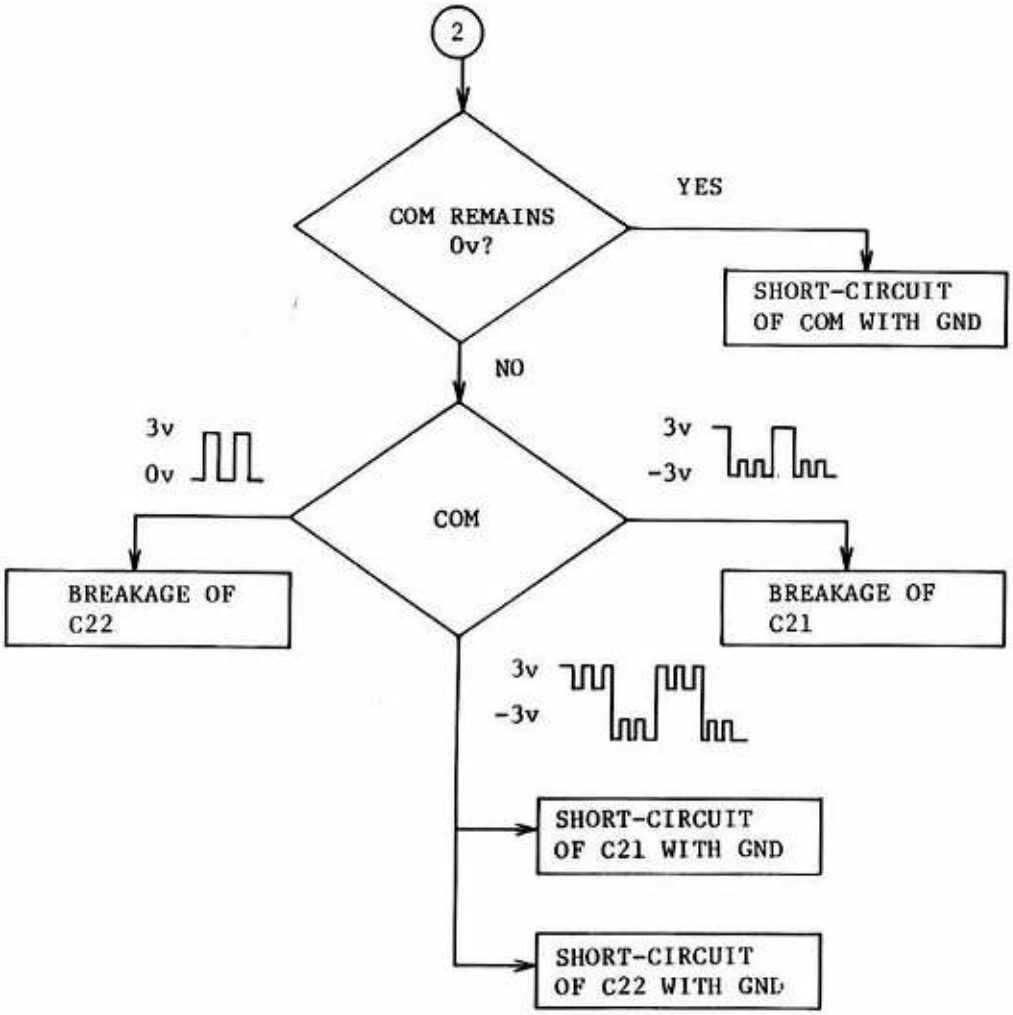

6 APERTURE CONTROL ON P AND S MODES ARE INACCURATE

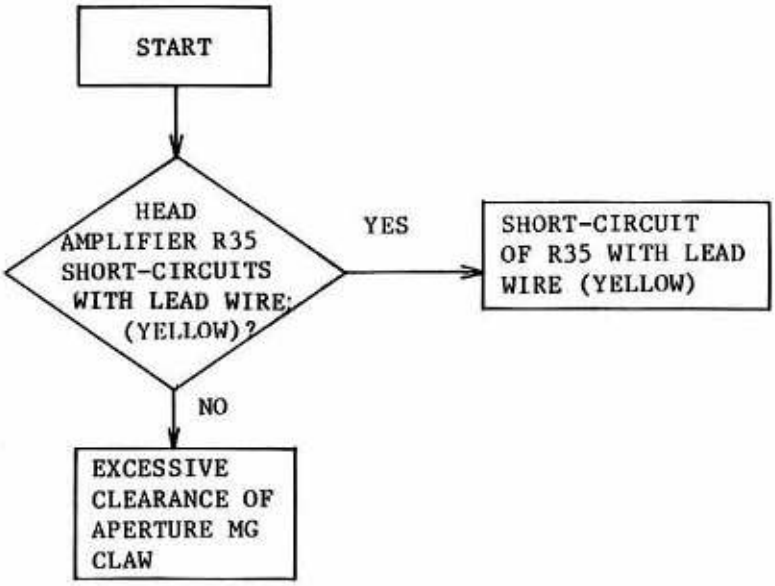

7 INCORRECT ADJUSTMENT OF SHUTTER SPEEDS DELIVERY

7-1 Incorrect adjustment of AMP metering

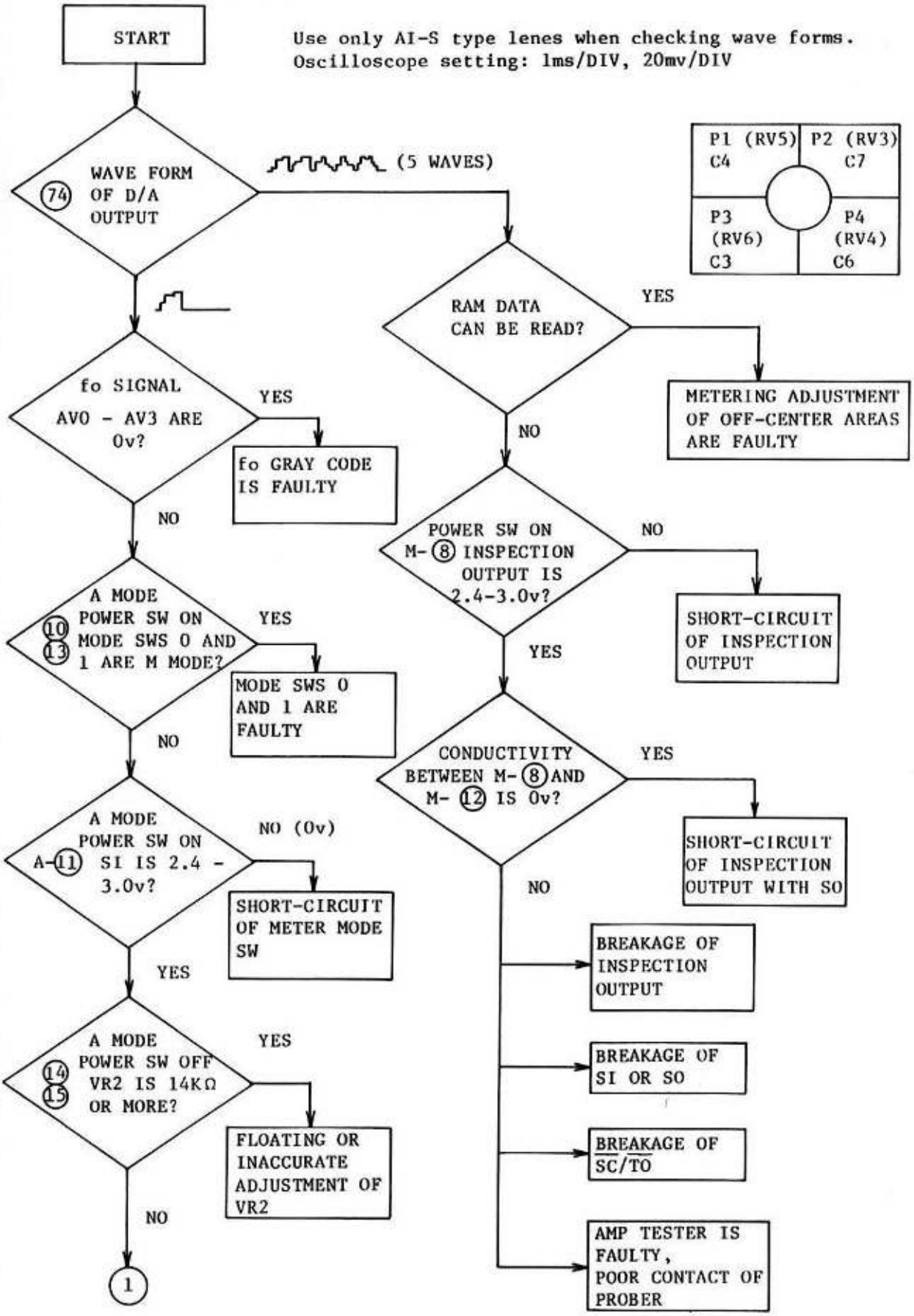

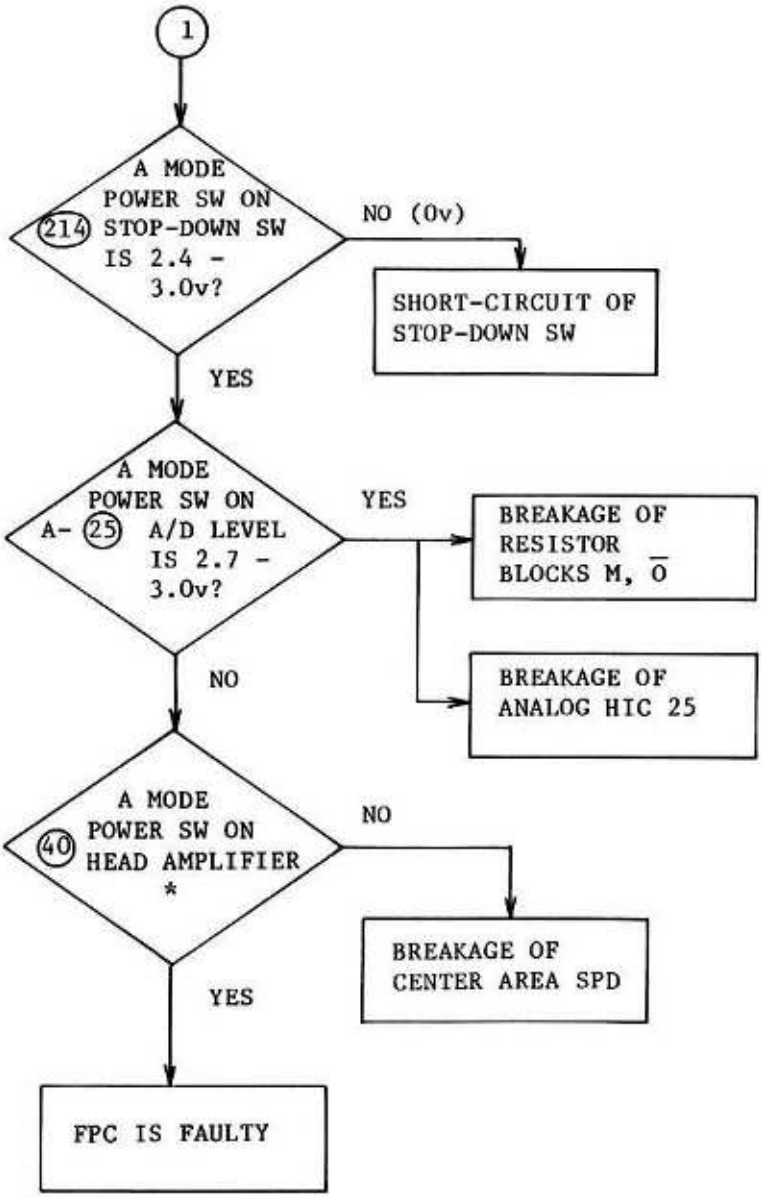

*: The wave form varies depending on the light amount?

7-2 Incorrect adjustment of off-center ares variable resistors

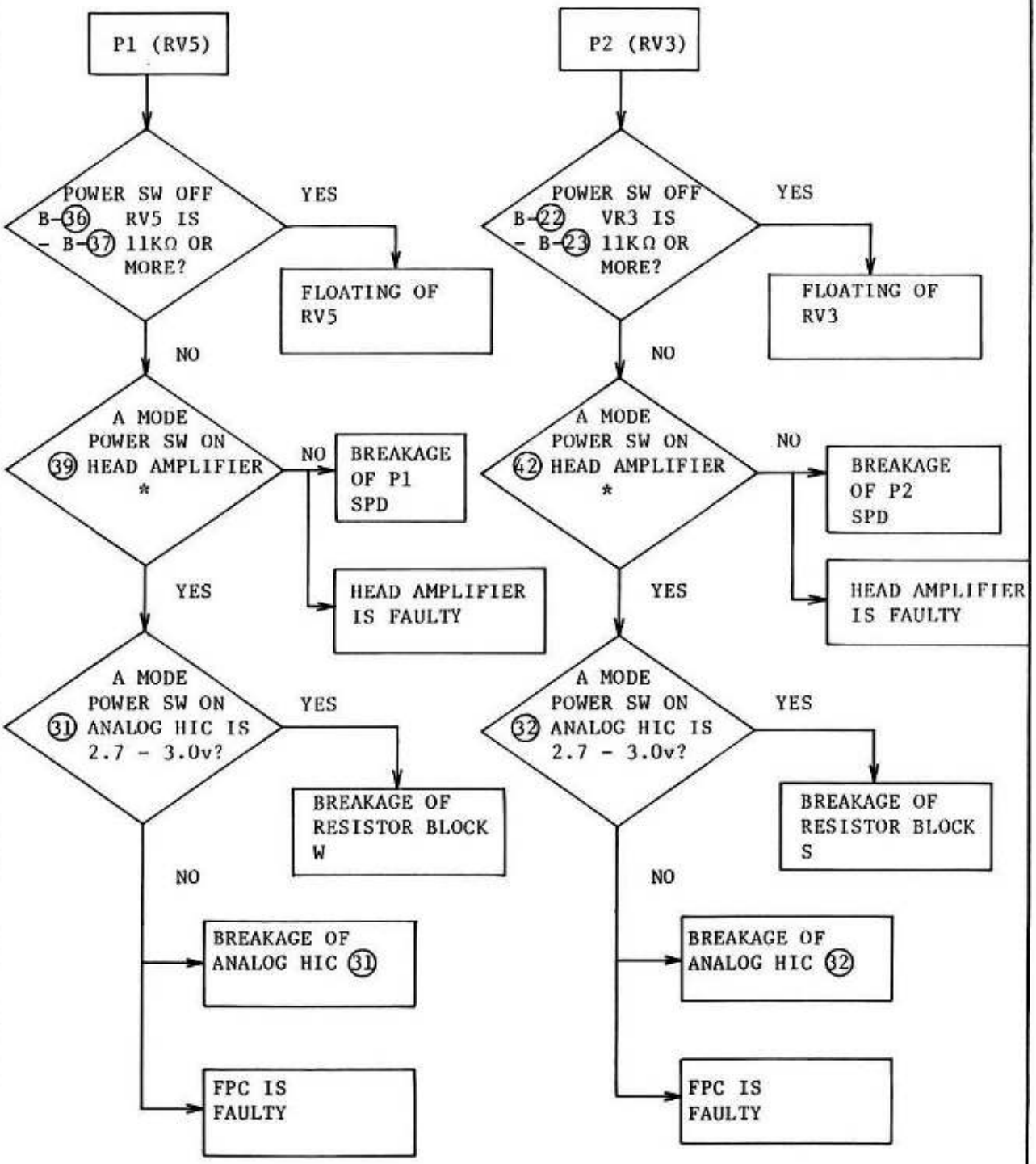

*: The voltage varies depending on the light amount?

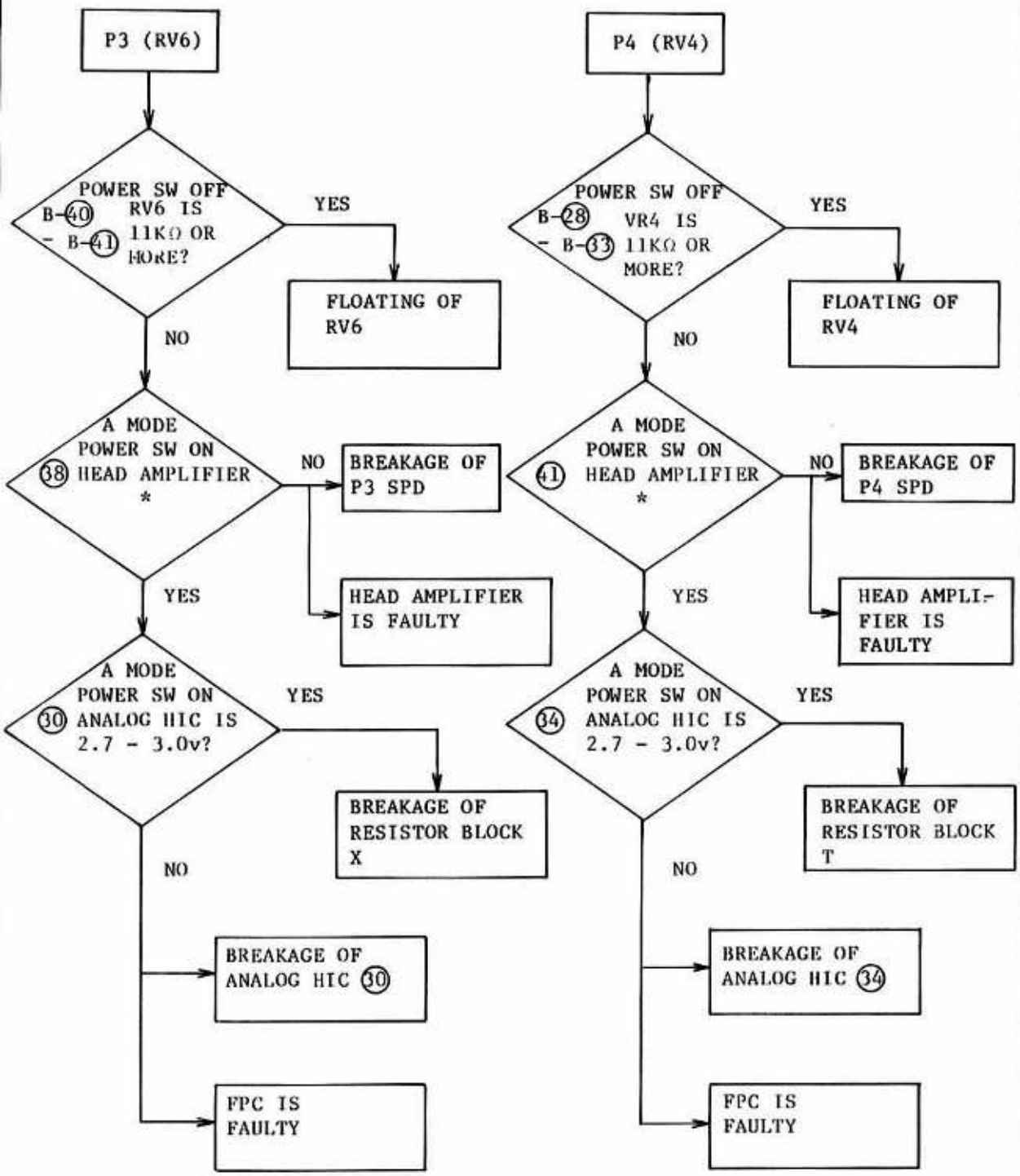

*: The voltage varies depending on the light amount?

7-3 Incorrect adjustment of automatic exposure

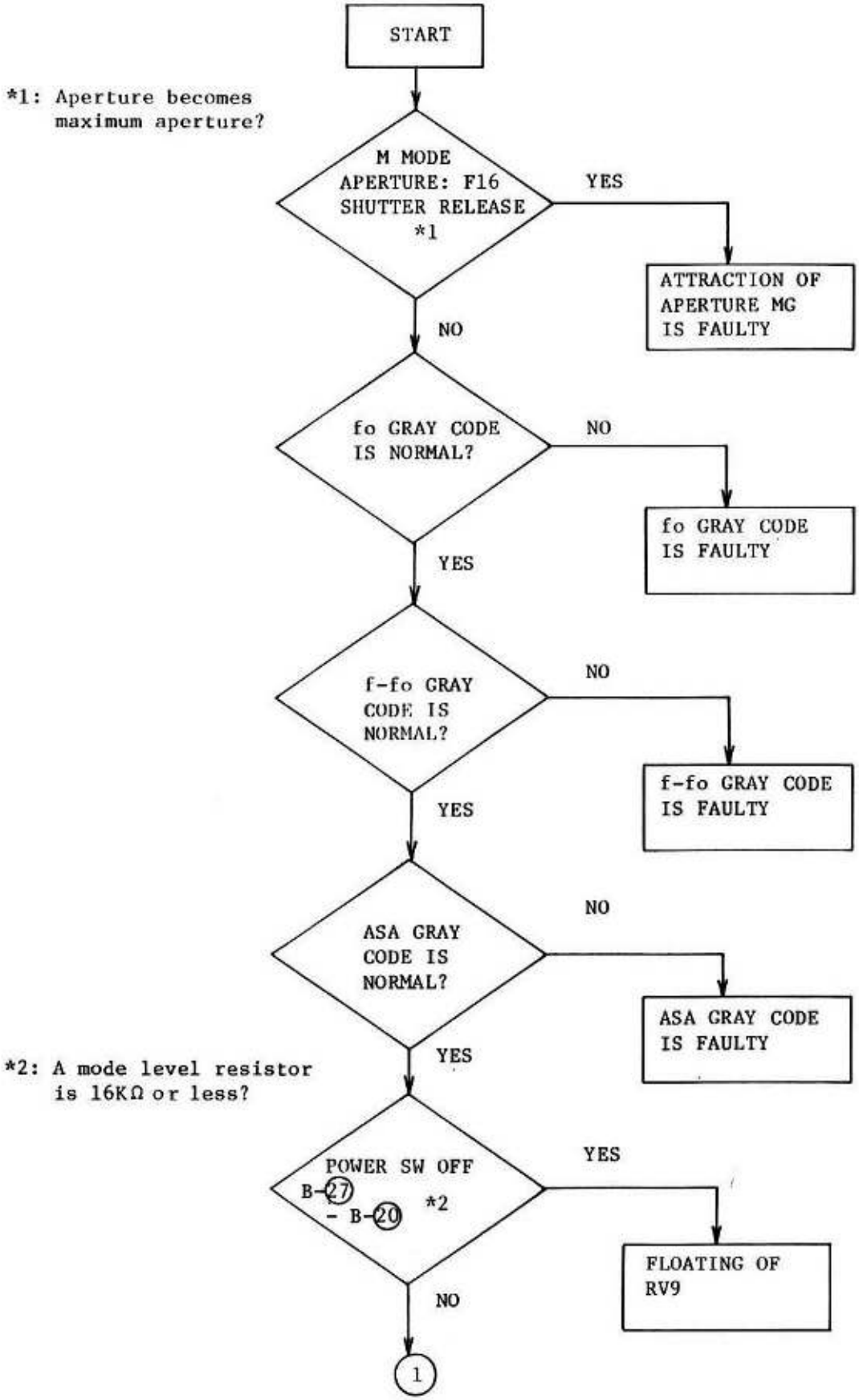

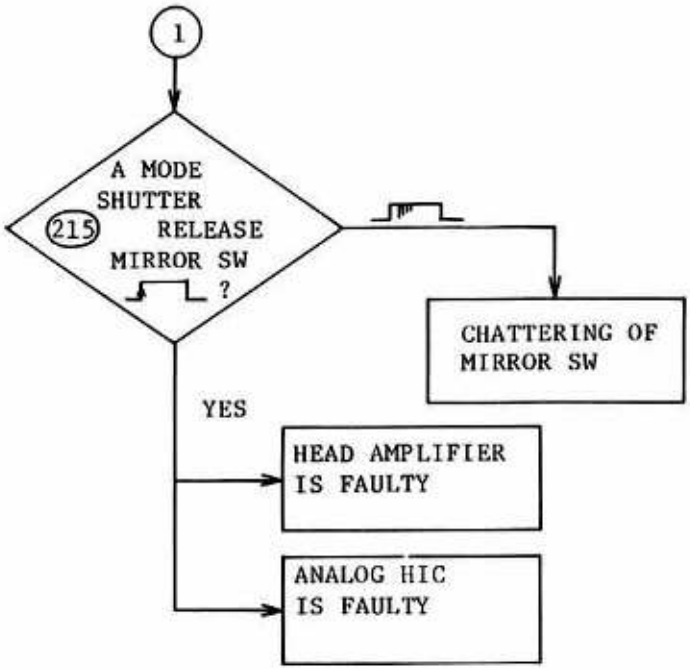

7-4 Shutter speed M1/4000 is inaccurate

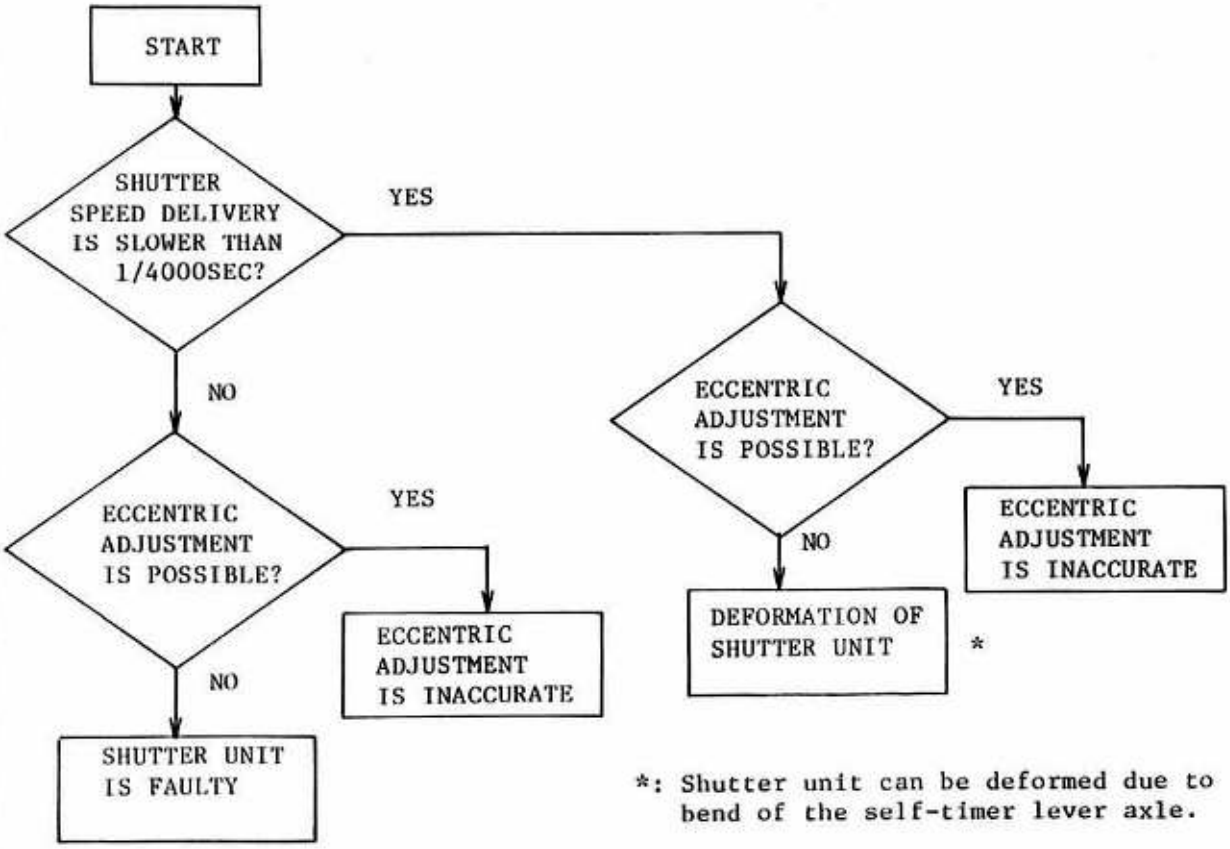

*: Shutter unit can be deformed due to bend of the self-timer lever axle.

Shutter speed should be checked after eccentric adjustment.

8 TTL FLASH OUTPUT CONTROL IS INACCURATE

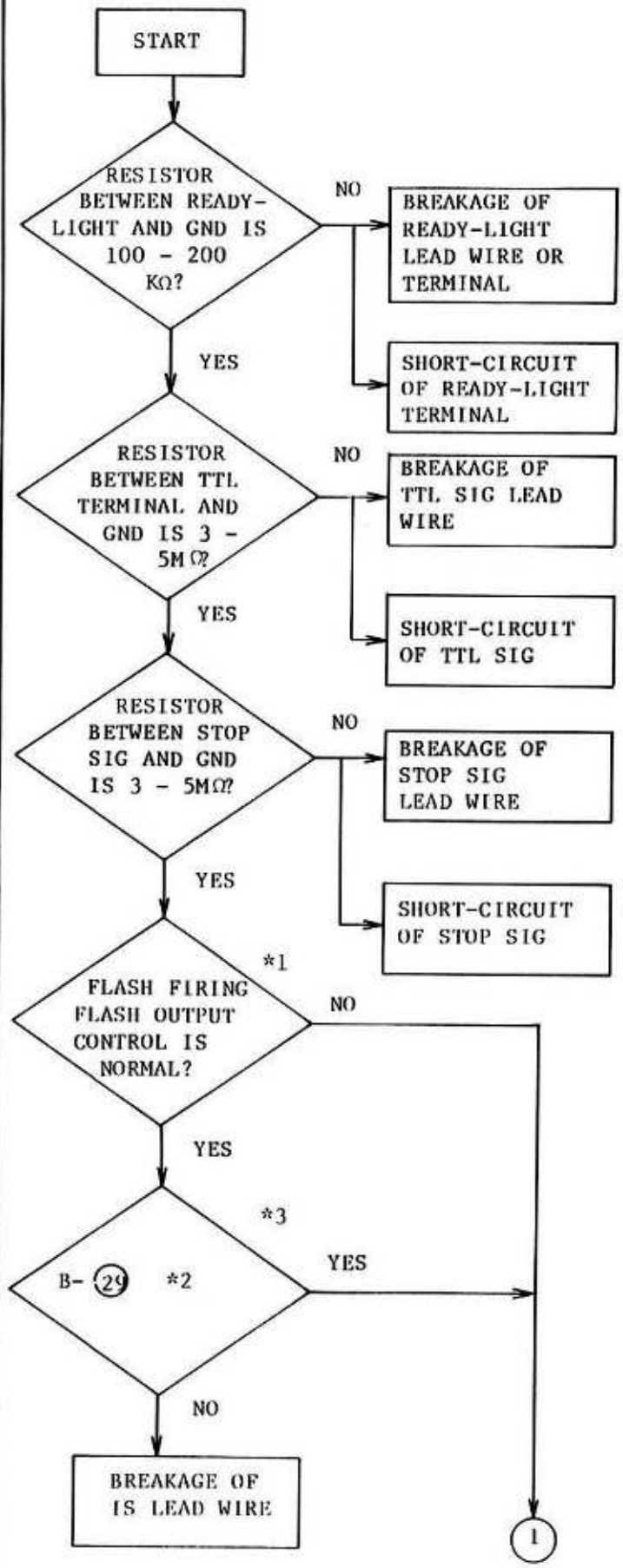

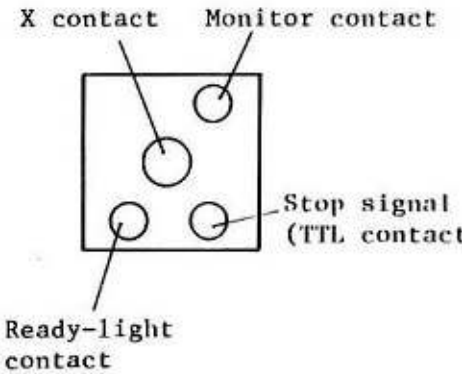

Setting for TTL flash output control

1) Provide current flaw with the stop signal contact.

2) Connect the monitor contact with GND

3) Connect the prober of Oscillscope to the stop signal contact.

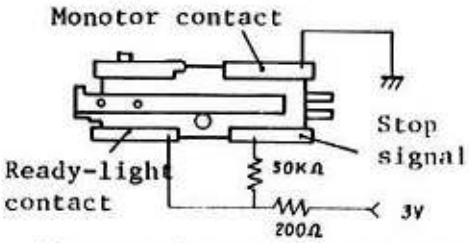

*1: Use the SB-15 or 16 when checking the flash firing.

*2: Conductivity between integration start and IS terminal is 0Ω?

*3: IS terminal is located inside the battery chamber.

*: Connect the trigger source of Oscilloscope to the the trigger signal and measure the stop signal on chop mode.

Set the shutter speed to is on M mode and provide the flash light with the TTL SPD from aperture side when reading the wave form.

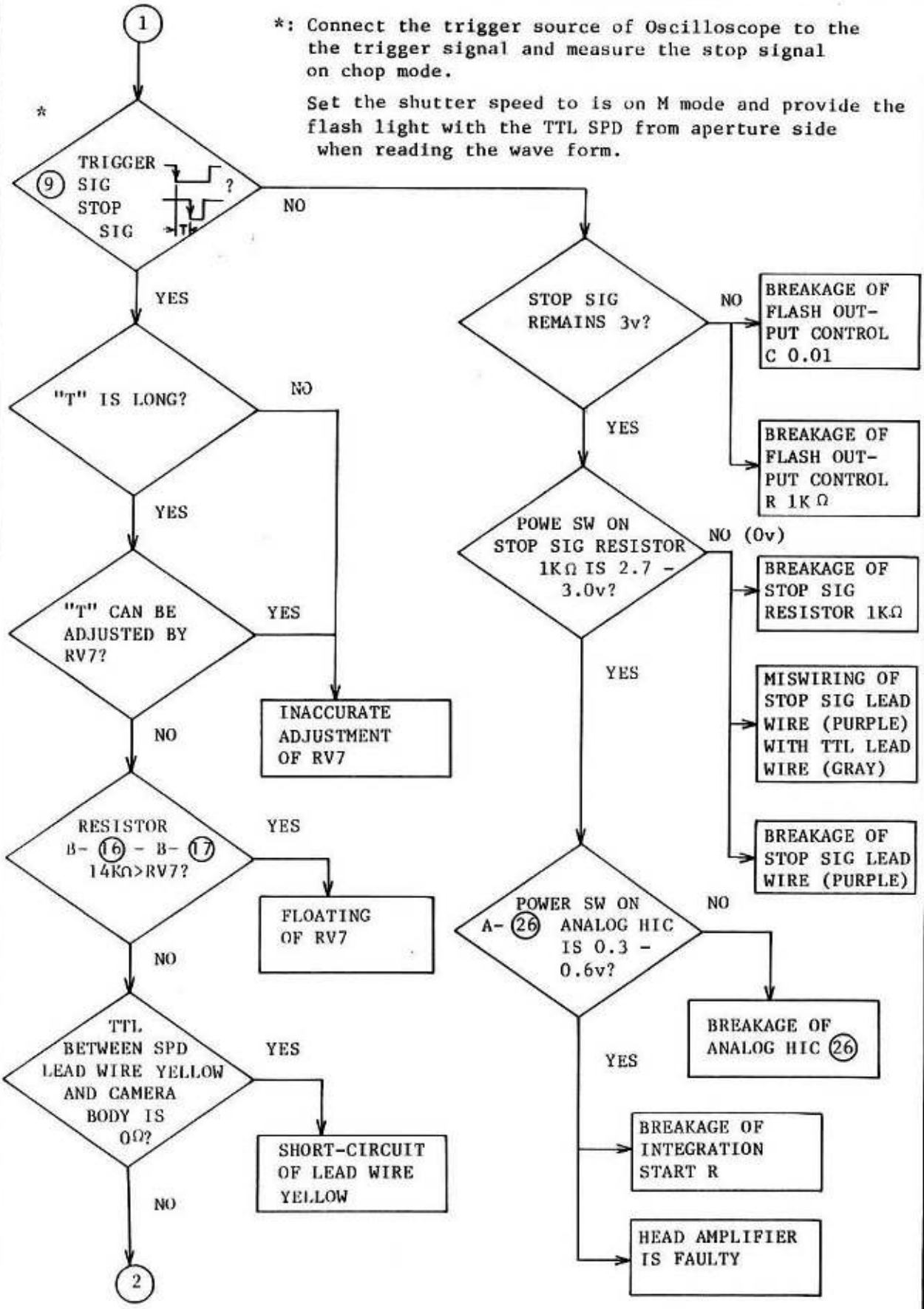

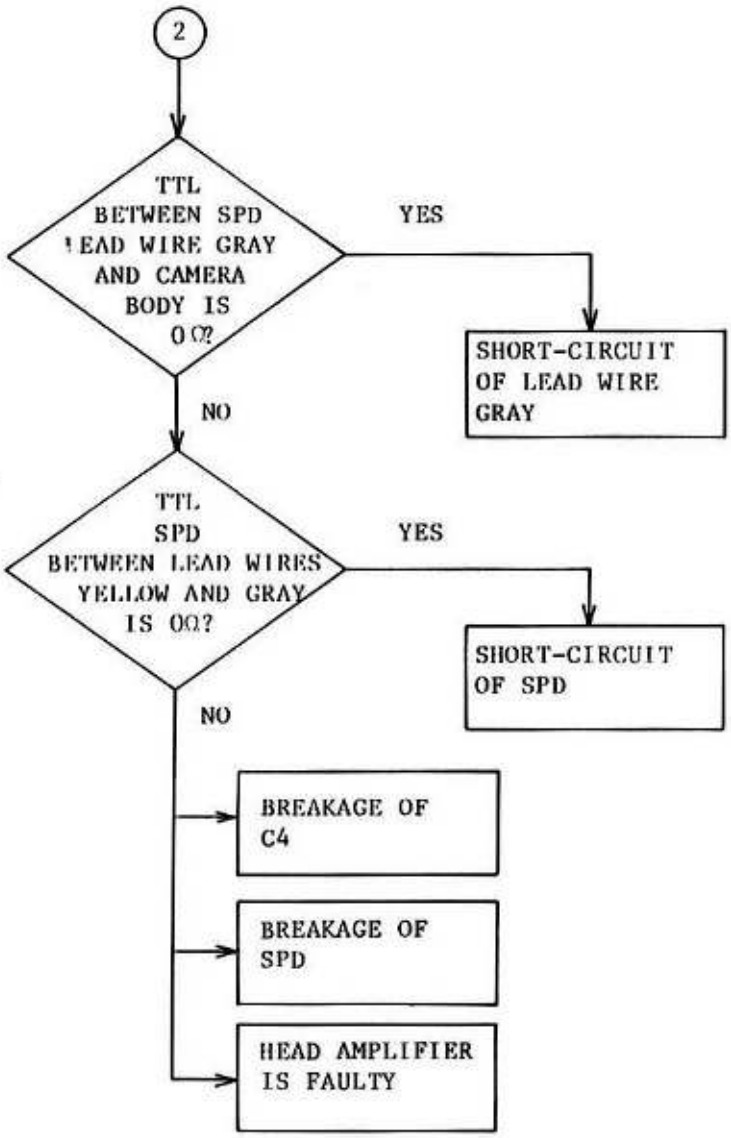
2
TTL BETWEEN SPD LEAD WIRE GRAY AND CAMERA BODY IS 0Ω?
YES
SHORT-CIRCUIT OF LEAD WIRE GRAY
NO
TTL SPD BETWEEN LEAD WIRES YELLOW AND GRAY IS 0Ω?
YES
SHORT-CIRCUIT OF SPD
NO
BREAKAGE OF C4
BREAKAGE OF SPD
HEAD AMPLIFIER IS FAULTY

INSPECTION STANDARDS FOR REPAIR & TOOLS

Contents Page

[1] INSPECTION STANDARDS FOR REPAIR R1

[2] TOOLS R10

INSPECTION STANDARDS FOR REPAIR

	Item	Standard	Tool
VIEWFINDER	Diopter	-1 ± 0.5 dpt. inside split-image $-1\ ^{+0.5}_{-1}$ dpt. outside split-image	
	Infinity focus	± 20"	
	Focus difference between split-image and micro prism	To be no difference	
	Infinity focus difference between before and after film-advance	To be no difference	J18006
	Image inclination	1° or less	J18010
	Parallax error	0.5mm or less vertically/horizontally	J9008
	View field frame inclination	30' or less	
	Viewfinder coverage	93 ± 2%	
	ADR window position	To be within ϕ5 of focusing screen 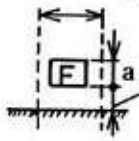 Clearance A between viewfield frame and ADR window A: 0.3a - 1a a: the height of ADR window Inclination: 2° or less	
	LCD window position	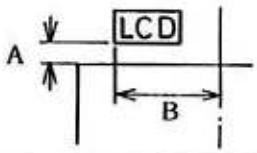 A = 0.3a - 1a B = 12.5mm or less Inclination: 2° or less	
	Difference of position between ADR window and LCD window	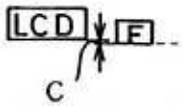 C = ± 0.2a	
	Shutter speed window	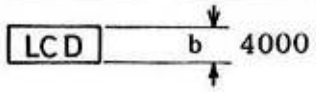 To be within the height of LCD panel (b) Inclination: 2° or less	

	Item	Standard	Tool
VIEWFINDER	Ready-light LED position	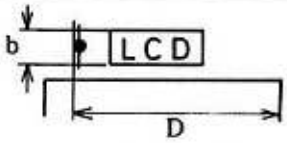 D = 14.6mm or less To be within the height of LCD panel (b)	
LENS MOUNT	Lens release button	Height: 0.7 - 1.2mm Tension: 1.5kg or less	
	EE lens pin	Tension: 60 - 120g Height: $1^{+0.3}_{-0.1}$ mm	Slide caliper
	Aperture coupling ring rotation angle	$Q1 = 52.5^{+0°}_{-1}$ Q2 = 113.5° or more	J18063
	Aperture lever height	After mirror charge: $3.1^{+0.1}_{-0}$ mm Before mirror charge: 3.6 - 3.8mm Balance between before/after film-advancing: 0.3mm or more	J18004
		Full stroke: 7.1mm or more	
		Tension: 90 - 120g	
FILM-ADVANCE MECHANISM	Film-advance lever angle	Full: 165° Stand-off: 30° Winding: 135°	
	Film-advance lever torque	Film unloaded: 2.4kg-cm or less Film loaded: 3.5kg-cm or less	
	Vertical play of film-advance lever	1mm or less at the end of film-advance lever	
	Spool	Torque: 90 - 140g-cm Slipping load: 144 - 224g	J5019
	Sprocket	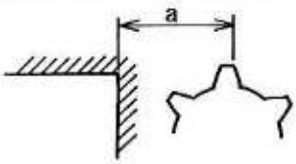 a: 32.4 ± 0.4mm	J18064-1
	Play of sprocket teeth	0.8mm or less	

	Item	Standard	Tool
FILM-ADVANCE MECHANISM	Rewind button	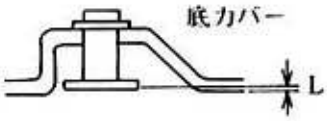 Distance from bottom cover Original position: 0.2 ± 0.2mm Set position: 2.7mm or less Tension: 150g or less	Slide caliper
FRAME COUNTER	Counter scale alignment	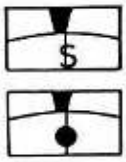 To be aligned with half or more of one full figure	
	Frame counter sw	To be turned on when counter reaches the position between "1" and the second dot from "S". LCD readout M mode: MC250 A, S, P mode: C250	J18147
SHUTTER BUTTON	Stroke	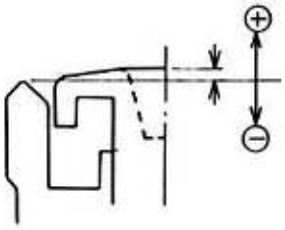 Meter sw-ON: 0.3 - 0 mm Release: -0.2 - -0.5 mm Mechanical release: -1.2 - -1.5 mm	Slide caliper
	Tension	a) Meter sw-ON: 200g b) Release: 200 - 300g c) Difference between a) and b): 50g or more d) Mechanical release: 250 - 400g	J5019
SELF-TIMER	Delay action time	8 - 14 sec.	
SHUTTER DIAL	Click-out torque	600 ± 200 g-cm (800 ± 200 g-cm at the setting of 250 sec.)	

	Item	Standard	Tool
SHUTTER DIAL	Shutter dial scale alignment	To be aligned with center of index mark 4000	
	Mechanical release lock	Shutter release is to be available by pressing the mechanical release lock button and setting the shutter speed dial to M250.	
MODE SELECTOR	Click-out torque	40^{+200}_{-100} g-cm	
	Index alignment	To be without outstanding misalignment	
ASA/EXPOSURE COMPENSATION	ASA dial scale alignment	To be aligned with ASA dial index	
	Exposure compensation setting range	ASA 12: +1 - -2 ASA 4000: +2 - -1 ASA 25 - 2000: ± 2	
	Exposure compensation dial scale alignment	To be aligned scale dot with exposure compensation index	
	Exposure compensation dial lock button	Release stroke: 0.2mm or more Tension: 200 - 500g	
EYEPIECE SHUTTER	Eyepiece shutter lever	Tension: 100 - 300g To be clicked	
CAMERA BACK	Rewind know lift	Tension: Approx. 1kg	
	Camera back hinge vertical play	2mm or less	
	Pressure plate	Pressure: 350 - 500g Flatness: 0.02mm or less	
FILM RAILS	Flange focal distance	46.67 ± 0.02mm Paralellness: 0.02mm or less Balance of height between internal and external film rails: 0.23 ± 0.02mm Balance of height between internal film rails and aperture plate: 0.2mm or more	J18001-1 J19004

	Item	Standard	Tool
MD FILM-ADVANCE	MD coupling rotation	Start: +2° - -1° Wound: +132° - +138°	
	MD coupling torque	Film unloaded: 2.4 kg-cm or less Film loaded: 3.5 kg-cm or less	
	MD release shaft stroke	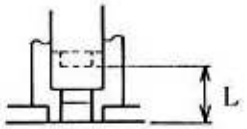 Original position: $0.7 \begin{smallmatrix} +0.2 \\ -0.3 \end{smallmatrix}$ mm Release: 1.2 - 2.5mm Full: 3.5 ± 0.2 mm	Slide caliper
	MD sw	To be ON at the retracted position of film-advance lever To be OFF at the stand-off position of fil-advance lever	

SHUTTER SPEEDS ACCURACY ON M MODE

Exposure time on manual mode

Shutter speed	Standard	Tolerance (ms)	
M250	3.906	± 0.45 EV	2.86 - 5.34
4000	0.244		0.179 - 0.334
2000	0.488		0.357 - 0.667
1000	0.977		0.715 - 1.334
500	1.953		1.430 - 2.67
250	3.906	$\begin{smallmatrix} +0.45 \\ -0.06 \end{smallmatrix}$ EV	2.86 - 5.34
125	7.81	± 0.3 EV	6.35 - 9.62
60	15.63		12.69 - 19.24
30	31.25		25.4 - 38.5
15	62.5		50.8 - 76.9
8	125		101.5 - 153.9
4	250		203 - 308
2	500		406 - 616
1	1000		812 - 1231

	Item	Standard	Tool
SHUTTER SPEEDS ACCURACY ON M MODE	Exposure unevenness	1/4000 - 1/2000: 0.5EV or less 1/1000 - 1/250: 0.25EV or less 1/125 - 1: 0.2EV or less	J19040 (50/F1.4)
	Variation	1/4000, 1/2000: 0.45EV	

	Item	Standard	Tool
SHUTTER SPEEDS ACCURACY ON A, S AND P MODES	Shutter speeds accuracy on A, S and P modes	1/4000: ± 0.75EV 1/2000, 1/1000: ± 0.65EV 1/5000 - 1: (A mode) F1.4 - F5.6: ± 0.6EV F8 - F16: $^{+0.6}_{-1.0}$ EV (S and P modes) F2.2 - F11: ± 0.45EV F1.4 - F2: ± 0.7 EV	J19040 50/1.4 (AI-S)
	Variation	1/4000, 1/2000: ± 0.45EV or less	
	Auto limitter	To be 1/4000 or less	
	Exposure amount of film plane	1/4000: ± 0.75EV 1/2000, 1/1000: ± 0.65EV 1/500 - 1/8: ± 0.6EV 1/4 - 1: 1) F1.4 - F5.6: ± 0.6EV 2) F8 - F16: $^{+0.6}_{-1.0}$ EV Difference between normal and self-timer release: ± 0.5EV or less Difference between full aperture and stop-down meterings: ± 0.3EV or less	
	Aperture control accuracy	Tolerance: ± 0.3AV or less (LV12, ASA100, F5.6, 1/250 sec.) ± 1.0AV or less (other conditions)	

Exposure time

	EV	ASA	F No.	Shutter speed	Standard	Tolerance		F No.	Tolerance		
A	15	100	2.8	(4000)	0.244	0.145~0.41	±0.75				±0.75
	〃	〃	4	(2000)	0.488	0.311~0.766	±0.65				±0.65
	〃	〃	5.6	(1000)	0.977	0.623~1.533					
	12	〃	〃	(125)	7.81	5.15 ~11.84	±0.6				±0.6
	〃	〃	8	(60)	15.6	10.29~23.65					
	9	〃	11	(4)	250	165 ~379					
	6	〃	8	(1)	1000	660 ~1516					
S	〃	〃	(〃)	〃	〃	660 ~1516		8	5.66~11.31	±1	
	12	〃	(11)	30	31.3	22.9 ~428	±0.45	11.31	8 ~16		
	〃	〃	(5.6)	125	7.81	5.72 ~10.67		5.66	5.10~ 6.28	±0.3	
	15	〃	(〃)	1000	0.977	0.623~1.533	±0.65	〃	4 ~ 8	±1	±0.65
	〃	〃	(2.8)	4000	0.244	0.145~0.41	±0.75	2.83	2 ~ 4		±0.75
P	9	〃	3.36	(45.3)	22.1	16.18~30.19	±0.45	3.36	2.38~ 4.75	±1	±0.6
	12	〃	5.6	(125)	7.81	5.72 ~10.67		5.66	5.10~ 6.28	±0.3	
	15	〃	9.51	(362)	2.76	2.02 ~3.77		9.51	6.72~13.45	±1	

	Item	Standard	Tool
METERING/LCD READOUT	Metering accuracy	M mode: ± 1/3EV or less A, S and P modes: ± 1/2 or less	J19040 50/1.4 (AI-S)
	Out-of-metering range warning on A, S, P mode	Too bright: "HI" (LV15, ASA100, F2) Too dark: "LO" (LV6, ASA100, F11)	
	Out-of-metering range warning on S mode	1) (F-F0) + F0 > middle aperture opening between F16 and F11 Matching aperture unavailable: Shutter speed override Too bright: "HI" Too dark: "LO" 2) (F-F0) + F0 ≦ middle aperture opening between F16 and F11 Matching aperture unavailable: Shutter speed override Too bright: "FEE" Too dark: "LO"	
	Warning for minimum aperture setting on P mode	Aperture selected: LCD readout F11 or larger: FEE F16: Selected shutter speed	
	Stop-down metering	Mode: S, P LCD readout: 15, 15 Conditions: LV12, ASA100, F16, 1/125 sec. Mode: A, M LCD readout: 125, $^{-+}$M 125 Conditions: LV12, ASA100, F5.6, 1/125 sec.	
METERING SW	Meter hold	16 ± 1sec.	
	Power cancel	LCD readout turns off by setting the shutter dial to M250.	

	Item	Standard				Tool
SYNCHRONIZATION	Time-lag	0.118 - 0.361 ms				J19028-1 J15166 J9006
	Contact efficiency	Gate time	1 ms	2.5 ms		
		Contact efficiency	60% or more	70% or more		
		Shutter speed on M mode	1/250	1/30		
	Insulation resistance	30 MΩ or more				
BATTERY CHECK	Battery check voltage	2.50V: Meter 16 sec. - hold available 2.40V: Meter-ON available during shutter button depressed 2.30V: Shutter release prohibited				J9001-5
TTL FLASH OUTPUT CONTROL	Ready-light	To be turned on when fully charged				SB-15 J18142 J15225 J15164
	ASA setting error warning	ASA16 - 640: Ready-light glows ASA12 and ASA800 or more: Ready-light blinks				
	LCD readout shutter speed delivery	Mode/set speed	4000 - 500	250 - 1	A, S, P	
		Shutter speed delivery	1/250	as set	1/250	
		LCD readout	M250	as set	250	
	TTL flash output control	0.09 ms $^{+0.013}_{-0.012}$ (LV15, ASA100, F1.4)				J9001-5 J15196
DATA BACK CONTACT	Sync time	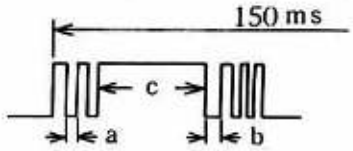 a: 2 ms or less (ON-chuttering) b: 10 ms or less (OFF-chuttering) c: 20 ms or more (Contact) Not to repeat contact within 150 ms.				J90031

	Item	Standard	Tool
PICTURE FRAME	Frame size	$24^{+0.4}_{0}$ mm x $36^{+0.4}_{0}$ mm	
	Space between two adjacent frames	2 ± 1 mm	
	Variation of vertical positions of frames	0.4 mm or less	

TOOLS

Test equipment

Tool No.	Title	Remarks	Usable other tool
J19040	Shutter tester SF-4DNS	For 35mm focal-plane shutter camera with automatic mode	J19036
J18147	AMP tester	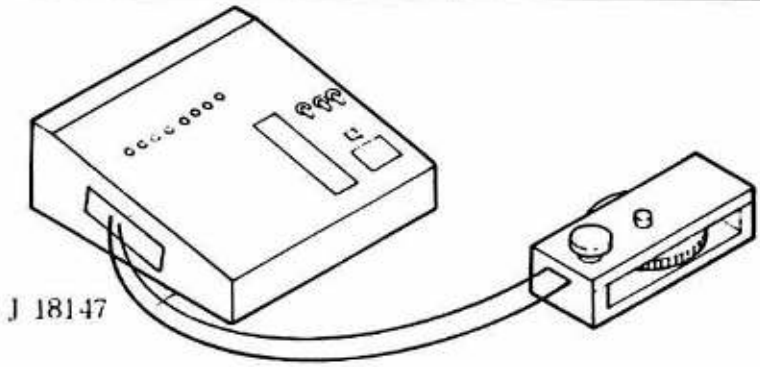	

Tool list

Tool No.	Name	Illustration	Class
J11184	Screw driver (Stop-down lever screw #289)		A
J11186	Screw driver (Grip guide screw #189)	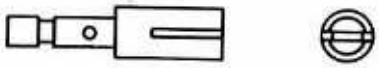	A

潤滑油・接着剤一覧表 LUBRICANT AND BINDING AGENT LIST

潤滑油 LUBRICANTS

油 Oil	用途 Usage	番号 Items number	商品名 Items 日本 Japanese	資材コード Material Cord No.	備考 Remarks
液体油 Liqvid oil	常温用 At a normal temperature	L 1233	57Tオイル No.33 (シェル石油)	E 216	
		L 1309	モービ・ループ HD 80/90 (モービル石油)	E 223	
		L 1314	モービ・ループ HD 140 (〃)	E 224	
	低温用 At a low temperature	L 2010	アストロ・オイル (ウィリアム・F・ナイ)	E 269	
		L 2113	D・O・Sセパケート (三建化工)	E 274	
		L 2115	エクリプス・パイオニア エクリプス・パイオニア#10 (ジャイロ油)		廃止 代用 G7100 G8181
		L 3016	スクワレル LA−10 (理研製油)	E 261	
		L 3025	〃 M−1 (〃)	E 262	
		L 3034	〃 M−2 (〃)	E 263	
		L 3044	〃 M−5 (〃)	E 264	
		L 3047	〃 H−1 (〃)	E 265	
		L 4010	ロジモール・オイルP−2 (ロジモール)	E 2831	
		L 4015	〃 P−2/M0 (〃)	E 2832	
グリース Grease oil	常温用 At a normal temperature	G 6053	パーマループ H1003 (日本鉱油)	E 275	
		G 6252	ダフニー・コロネックス No.2 (出光興産)	E 226	16kg入
		G 6433	光学用グリース X−2 (杉浦研究所)	E 2837	
		G 6434	〃 X−3 (〃)	E 2838	G6414の代用
		G 7821	リマックスグリース No.2 (丸善石油)	E 225	
		G 7910	LOSOID 1150E/35019 (ロジモール)	E 2834	
		G 7920	〃 1160B (〃)	E 2835	
		G 7930	モービラックスグリース No.2 (モービル)	E 2852	
		G 7950	No. 502 (和光光学研究所)	E 2839	G5201の代用
		G 7951	機軸用油 (〃)	E 2840	G5204の代用
		G 7952	モリトン CK (住鉱潤滑剤)	E 2841	G5214の代用
	低温用 At a low temperature	G 7100	スクワグリース L−2 (理研製油)	E 266	
		G 7811	フォトループ 024 (日本鉱油)	E 272	
		G 7813	フォートループ 025 (NK仕様)	E 280	
		G 7814	マルテンプ PS No.1 (協同油脂)	E 276	
		G 7815	〃 PS No.2 (〃)	E 2844	
		G 7816	ホワイトグリースA (トーオーポリマー)	E 2842	(FL−LUBE−A)
		G 7825	イソフレックススーパーテル3000(クルーバー社)	E 2843	
		G 7833	シリコン・グリースSH33(F)(トーレ・シリコーン)	E 2845	
		G 7848	ユニテンプ・グリースEP (日本石油)	E 2846	
		G 7854	パーマループ C−1 (〃)	E 2847	
		G 7855	〃 C−2 (〃)	E 2848	
		G 7856	〃 C−3 (〃)	E 2849	
		G 7857	〃 C−3−3 (〃)	E 2850	

潤滑油 LUBRICANTS

油 Oil	用途 Usage	番号 Items number	商品名 Items 日本 Japanese	資材コード Material Cord No.	備考 Remarks
グリース Grease oil	低温用 At a low temperature	G 7866	フォトルーブ023 (日本鉱油)	E 271	
		G 7870	モービル・グリース28 (モービル石油)	E 2851	
		G 8181	メーカ調合 (NK仕様)	E 281	
		G 8613	リキモリ・パウダーLM−13 (ロックレー)	E 2853	
		G 8800	1J−10A NK仕様 (日本鉱油)	E 282	
		G 7862	パーマルーブ F−2		廃止

接着剤 BINDING AGENTS

用途 Usage	番号 Items number	商品名 Items 日本 Japanese	資材コード Materiat Cord No.	備考 Remarks
皮類，ゴム類 For leather or rubber goods.	# 501	プライオボンド #30	E 154	
	# 519	セメダインハイコンタクト	E 174	
	# 520	ソニーボンド SC306	E 183	
一般金属相互 ガラスと金属 For make metal goods together with metal goods or glass with metal	# 420	ハードロック E 510	E 187	1：1
	# 616	セメダインスーパー 7mℓ入	E 153	同じ物
		セメダイン #1500 家庭用40mℓ入	E 171	
	# 621	主剤ーセメダイン #1565 500g入	E 175	1：1〜1.5
		硬化剤ーポリサルファイト 500g入	E 176	
	# 622	主剤ーセメダイン #1565 500g入	E 175	100：10〜20
		硬化剤ーD液（ポリアミン） 500g入	E 178	
	# 631	アラルダイト AT1	E 180	
	# 645	主剤ーDMK5	E 160	100：12
		硬化剤ーHL105	E 161	
	# 648	セメダイン #1590 ハイスーパー 15g入	E 173	1：1
	# 649	主剤ーアラルダイト AW106	E 181	10：8 (体積比)
		硬化剤ーHV953U	E 182	1：1
工程上の仮止め For temporary adhesion in the process				
	# 350	ネジロック（赤・白） 200g入	E 157	
	# 410	ロックタイト (B/M黄、ST/L赤、N/L青、SC/L柴) 50cc入	(黄)E163,(赤)E164,(青)E165,(柴)E166	
	# 921	アロンアルファ # 201	E 155	(20g入)
	# 922	〃 # 202	E 156	(20g入)
充填を主とする接着 For replenishment	# 503	ウェザーパンシーラー 3ℓ入	E 185	
	# 515	KE45RTV (黒・白) 100g入	E 186	
	# 516	スリーボンド 1104 1kg入	E 184	
	# 701	セメダイン 1001 500g入	E 179	
	# 520	ソニーボンド SC306	E 183	
	# 519	セメダインハイコンタクト	E 147	

PARTS LIST

Contents

[1] Parts Number Reference Table P1

[2] Parts List P10

[3] Assembly List P37

DRAWING OF COMPLETE CAMERA SECTION

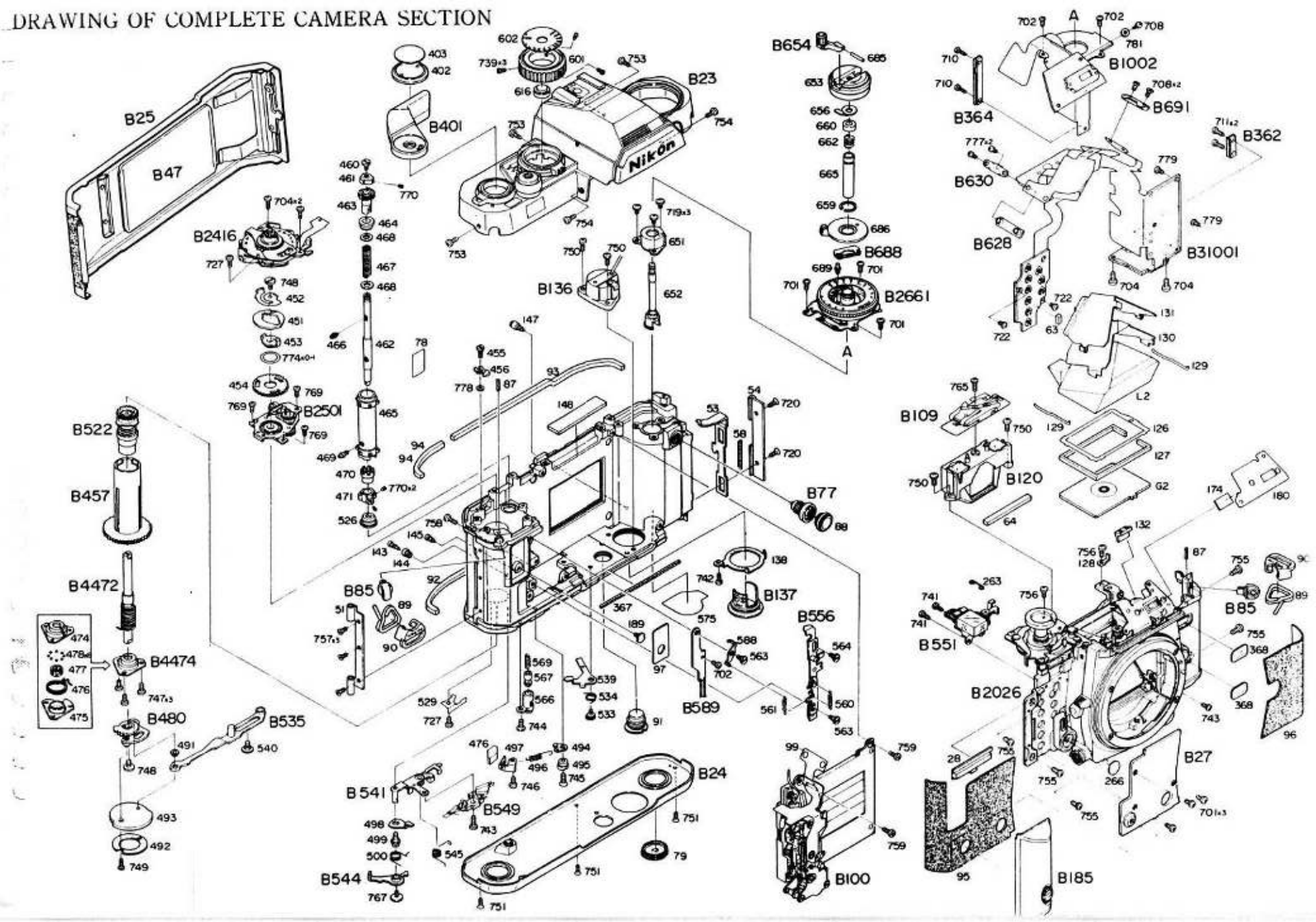

RP情報
RP-INF. No. 9128

修理用部品表訂正通知
REPAIR PARTS CHANGE LIST

カメラサービス部 部品課
SEP. 26, 1991
PARTS CONTROL SECTION
SERVICE DEPARTMENT

対象機種 Product	部品番号 Part No.	部品番号 Details	Relevant Page No 部品表頁			部品表 Parts List 部品番号 Part No.		名称 Name	1台分員数 Pcs. Per Unit	構成部品番号 Constituent Parts	参照図番 Fig. No.	備考 Remarks	要求単位 A Unit for Order
FAA16001 (FA)	1B060-141-8 (1B060-141-7)	廃止 DISUSED	24		廃止 DIS-USED	1B060-141-8 (1B060-141-7)	B2416	~~ASAダイアル基板 ASA Dial unit~~	~~1~~		8	~~RP-9128~~	1
		追加 ADDED			追加 ADD-ED	1B001-256-5S		ASAダイアル基板 Base plate, ASA dial	1		8	RP-9128	1
		追加 ADDED			追加 ADD-ED	1B999-009S		ASAダイアル ASA dial	1		8	RP-9128	1
		追加 ADDED			追加 ADD-ED	1K060-018		止め輪 ring	1		8	RP-9128	10

PLEASE REFER TO THE DRAWING AND USE THE INDIVIDUAL REPAIR PARTS.

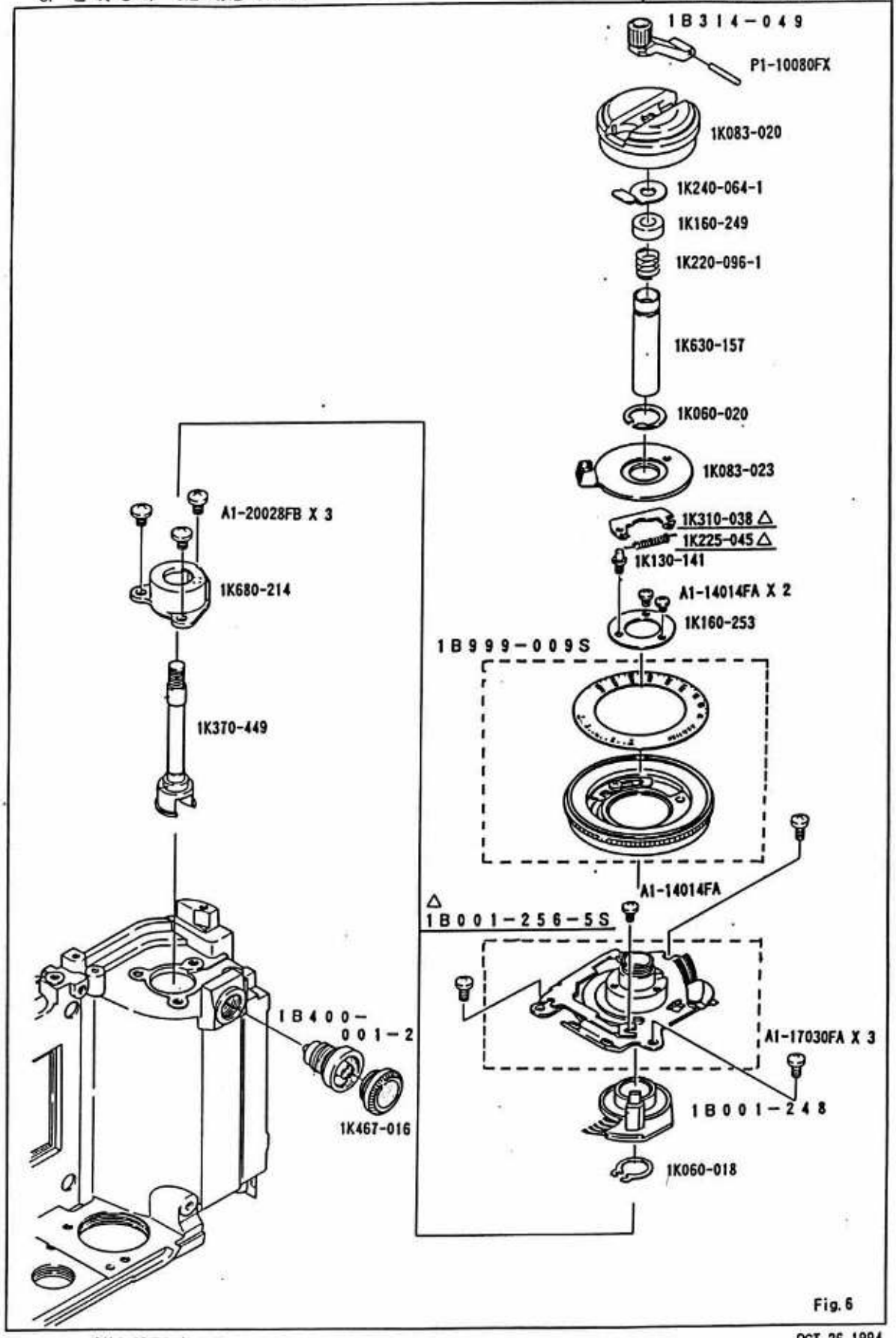
1B314-049
P1-10080FX
1K083-020
1K240-064-1
1K160-249
1K220-096-1
1K630-157
1K060-020
1K083-023
A1-20028FB X 3
1K310-038 △
1K225-045 △
1K130-141
1K680-214
A1-14014FA X 2
1K160-253
1B999-009S
1K370-449
A1-14014FA
△
1B001-256-5S
1B400-001-2
A1-17030FA X 3
1K467-016
1B001-248
1K060-018

Fig. 6

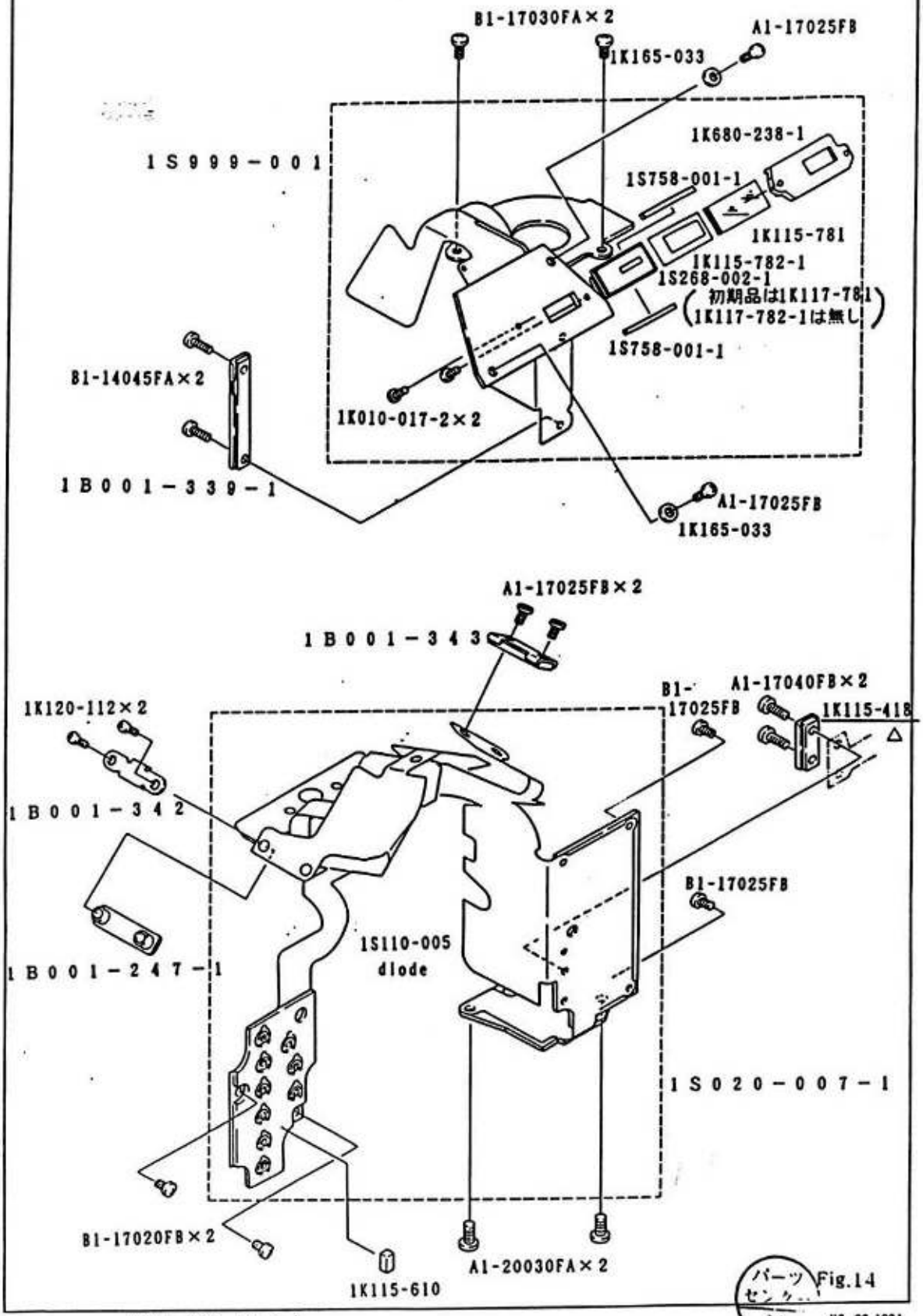
B1-17030FA×2
A1-17025FB
1K165-033
1S999-001
1K680-238-1
1S758-001-1
1K115-781
1K115-782-1
1S268-002-1
(初期品は1K117-781
1K117-782-1は無し)
1S758-001-1
B1-14045FA×2
1K010-017-2×2
1B001-339-1
A1-17025FB
1K165-033
A1-17025FB×2
1B001-343
B1-17025FB
A1-17040FB×2
1K115-418
△
1K120-112×2
1B001-342
B1-17025FB
1S110-005
diode
1B001-247-1
1S020-007-1
B1-17020FB×2
1K115-610
A1-20030FA×2

Fig.14

部品番号 Part No	補助番号 Ckt. No.	名称 Name	1台分個数 Pcs. Per Unit	部組品番号 Assembly	参照図番 Fig.	販売区分 Term of Delivery	備考 Remarks	要求単位 Q'ty per order
*1K001-005	753	上カバー止ネジ（黒） Screw (black)	3		15	○	Add.	
*1K001-004	757	蝶番止ネジ Screw	3		16	○	FM2	
*1K001-006-1 (1K001-006)	751	底カバー止ネジ（黒） Screw (black)	3		5	○	FM2	
1K001-017	754	上カバー止ネジ（黒） Screw (black)	2		15	○		
*1K010-017-2 (1K010-017)	730	ＬＣＤ取付ネジ Screw	2		14	○	FM2	
*1K040-001-1 (1K040-001)	584	レリーズ釦ピン Screw	1	1B670-023-9 1B670-039 1B670-062 1B670-063	15	○△	FM2	
*1K050-022	718	チリトリワッシャー t=0.2 Washer	1	1B670-033-5 1B670-034-5	9	○△	FM2	
*1K050-029	738A	プリズムボックス調整座金 t=0.05 Washer, prism box	0～4	1B670-033-5 1B670-034-5	13	○△	FM2	
*1K050-030	738B	〃 t=0.06	0～4	1B670-033-5 1B670-034-5	13	○△	FM2	
*1K050-031	738C	〃 t=0.07	0～4	1B670-033-5 1B670-034-5	13	○△	FM2	
*1K050-032	738D	〃 t=0.08	0～4	1B670-033-5 1B670-034-5	13	○△	FM2	
*1K050-033	738E	〃 t=0.09	0～4	1B670-033-5 1B670-034-5	13	○△	FM2 OLD	
*1K050-034	738F	〃 t=0.1	0～4	1B670-033-5 1B670-034-5	13	○△	FM2	
*1K050-035	738G	〃 t=0.01	0～4	1B670-033-5 1B670-034-5	13	○△	FM2	
*1K050-036	738H	〃 t=0.12	0～4	1B670-033-5 1B670-034-5	13	○△	FM2	
*1K050-037	738I	〃 t=0.2	0～4	1B670-033-5 1B670-034-5	13	○△	FM2	
*1K050-038	738J	〃 t=0.3	0～4	1B670-033-5 1B670-034-5	13	○△	FM2	
*1K050-039	738K	〃 t=0.4	0～4	1B670-033-5 1B670-034-5	13	○△	FM2	
*1K050-040	738L	〃 t=0.5	0～4	1B670-033-5 1B670-034-5	13	○△	FM2	

部品表 Parts List

FAA16001-R. 3130. A

部品番号 Part No	補助番号 Ckt. No.	名称 Name	1台分個数 Pcs. Per Unit	部組品番号 Assembly	参照図番 Fig.	販売区分 Term of Delivery	備考 Remarks	要求単位 Q'ty per order
*1K050-041	738M	プリズムボックス調整座金 t=0.6 Washer, prism box	0~4	1B670-033-5 1B670-034-5	13	○△	FM2	
*1K050-042	738N	〃 t=0.7	0~4	1B670-033-5 1B670-034-5	13	○△	FM2	
*1K050-043	738P	〃 t=0.8	0~4	1B670-033-5 1B670-034-5	13	○△	FM2	
*1K050-044	738Q	〃 t=0.9	0~4	1B670-033-5 1B670-034-5	13	○△	FM2	
*1K050-045	738R	〃 t=1.0	0~4	1B670-033-5 1B670-034-5	13	○△	FM2	
*1K050-046	738S	〃 t=1.1	0~4	1B670-033-5 1B670-034-5	13	○△	FM2	
*1K050-047	738T	〃 t=1.2	0~4	1B670-033-5 1B670-034-5	13	○△	FM2	
*1K050-048	738U	〃 t=0.03	0~4	1B670-033-5 1B670-034-5	13	○△	FM2	
*1K050-073	778	面カム外しレバー座金 t=0.1 Washer, axle #455	1		4	○	FM2	
*1K050-074	468	スプロバネ座金 Washer, sprocket spring	2		1	○	FM2	
*1K050-075	774A	巻上ギアワッシャー t=0.05 Washer, film-advance gear	0~1		2	○	FM2	
*1K050-076	774B	〃 t=0.1	0~1		2	○	FM2	
*1K050-077	774C	〃 t=0.2	0~1		2	○	FM2	
*1K050-078	774D	〃 t=0.3	0~1		2	○	FM2	
*1K050-079	774E	〃 t=0.25	0~1		2	○	FM2	
*1K050-080	774F	〃 t=0.15	0~1		2	○	FM2	
1K050-111	163	バネ押さえ座金 Washer	1	1B150-018-7 1B150-042	12	○△		
1K050-112	718	ワッシャー t=0.3 Washer	0~1		9	○	FE2	
1K050-115	762	レリーズ釦ワッシャー Washer, release button	0~3	1B670-023-9 1B670-039	15	○△	OLD	

部品番号 Part No.	補助番号 Ckt No.	名称 Name	1台分個数 Q'ty Per Unit	部組品番号 Assembly	参照図番 Fig. No.	販売区分 Term of Delivery	備考 Remarks	要求単位 Q'ty per order
1K050-144	718	ワッシャー t=0.1 Washer	0-1		9	○	FE2	
1K050-153-1	776	AR解除バネ, ワッシャー Washer. AR release spring	1	1B670-023-9 1B670-039 1B670-062 1B670-063	15	○△		
1K050-176	762	レリーズ釦ワッシャー t=0.3 Washer	0-3	1B670-023-9 1B670-039	15	○△	RP-8403 OLD	
1K050-217	183	平座金 t=0.05 Washer	1			○	RP-8429 Add.	
1K050-218	135 738e	レリーズ釦ワッシャー t=0.09 Washer	2 0-4	 1B670-033-5 1B670-034-5		○△	RP-8431 Add.	
*1K060-008	721	ダウンバネワッシャー Washer. mirror down spring	1	1B670-033-5 1B670-034-5	8	○△	FG	
*1K060-010	725	制御連結レバーワッシャー Washer. lever #221	1	1B670-033-5 1B670-034-5	9	○△	FG	
1K060-018		止め環 Ring	1		8	○	RP-9128	10
*1K060-020	659	開閉ノブ押えクリップ Snap ring. O/C Knob	1		6	○	FE2 35FB#659	
*1K080-005	90	三角環保護カバー Neck-strap protector	2		4.13	○	FM2	
1K083-019-1 (1K083-019)	637A	モード指標板 (白) Mode index plate(Crom)	1	1B670-023-9 1B670-062	15	○△		
1K083-020	653	巻戻しノブ Rewind knob	1		6	○		
1K083-022	684A	補正指標板 Exposure compensation index	1	1B670-023-9 1B670-062	15	○△		
1K083-023	686	開閉ノブ O/C knob	1		6	○		
1K083-024S	409	多重レバー Multi-exposure lever	1	1B670-023-9 1B670-039 1B670-062 1B670-063	15	○△	RP-9015 RP-9020	
1K083-043-2 (1K083-043)	637B	モード指標板 (黒) Mode index plate(Black)	1	1B670-039 1B670-063	15	○△		
1K083-044	684B	補正指標板 Exposure compensation index	1	1B670-039 1B670-063	15	○△		

FA

部品表 Parts List

FAA16001-R. 3130. A

部品番号 Part No.	補助番号 Ckt No.	名称 Name	1台分個数 Q'ty Per Unit	部組品番号 Assembly	参照図番 Fig. No.	販売区分 Term of Delivery	備考 Remarks	要求単位 Order Unit Q'ty
*1K110-082	476	緩衝ゴム Shock absorber	1		5	○	FM2	
*1K115-154	71	遮光モルトA Light-tight sponge A	1	1B620-014-6	17	○△	FM2	
*1K115-155	72	遮光モルトB Light-tight sponge B	1	1B620-014-6	17	○△	FM2	
*1K115-156	73	遮光モルトC Light-tight sponge C	1	1B620-014-6	17	○△	FM2	
*1K115-157	74	遮光別珍B Light-tight cloth	1	1B620-014-6	17	○△	FM2	
*1K115-186	92	潰用モルトプレンA sponge strip A	1		16	○	FM2	
*1K115-189	93	潰用モルトプレンB sponge strip B	1		16	○	FM2	
*1K115-190	94	潰用モルトプレンC sponge strip C	1		16	○	FM2	
*1K115-191-1	284	ミラー制限モルト Sponge strip, mirror	1	1B670-033-5 1B670-034-5	9	○△	FM2	
*1K115-198	403	巻上げレバー擬革 Leatherette, self-timer lever	1		3	○	FM2	
*1K115-301-1	70	裏蓋擬革 Leatherette, camera back	1	1B620-014-6	7	○△	FM2	
1K115-395	266	セルフレバー擬革 Leatherette, self-timer lever	1		13	○		
1K115-396	285	I蒸着遮光シート Light-baffle sheet	1	1B060-137-5	7	○△		
1K115-412	108	押し棒 Switch plunger	1	1B670-023-9 1B670-039 1B670-062 1B670-063	15	○△		
1K115-414	148	接眼下モルト Light-tight, eyepiece	1		4	○		
1K115-415-1 (1K115-415)	174	偏光板 Polarizer	1		12			
1K115-416-1	180	絶縁シート Insulating sheet	1		18	○		
1K115-417-1	339	L蒸着遮光シート Light-baffle sheet	1	1B060-138-8	8	○△		
△ 1K115-418		ゴム板 Rubber plate	1		14	○	RP-9440	
1K115-421-1	367	前ボディ下モルト Sponge strip	1		4	○		

部品番号 Part No.	補助番号 Ckt No.	名称 Name	1台分個数 Q'ty Per Unit	部組品番号 Assembly	参照図番 Fig. No.	販売区分 Term of Delivery	備考 Remarks	要求単位 Q'ty per order
1K208-022-1	670	補正ロック釦 Button. exposure compensation dial lock	1	1B670-023-9 1B670-039 1B670-062	15	○△		
1K208-023-1 (1K208-023)	582	S釦 Shutter release button	1	1B670-023-9 1B670-039	15	○△		
1K208-025-1 (1K208-025)	616	飾り釦 Shutter dial button	1		12	○		
*1K220-031	76	裏蓋着脱バネ Spring. camera back release	1	1B620-014-6	17	○△	FM2	
*1K220-038-1	58	止め爪バネ Spring. latch B #53	1		16	○	FM2	
*1K220-039	467	スプロケットバネ Sprocket spring	1		1	○	FM2	
1K220-089	357	EE信号ピンバネ Spring. EE signal pin	1	1B670-033-5 1B670-034-5	10	○△	F-301	
1K220-091	633	上ロック解除バネ Spring Shutter dial lock release	1	1B670-023-9 1B670-039 1B670-062	15	○△		
1K220-092-1	585	S釦バネ Spring. shutter button	1	1B670-023-9 1B670-039	15	○△	59F-1003 RP-8408 OLD	
1K220-095	378	着脱釦バネ Spring. lens release button	1	1B670-033-5 1B670-034-5	10	○△	40FB#730	
*1K220-096-1 (1K220-096)	662	フリクションバネ Friction spring	1		6	○	RP-INF. 9207 FE2. 35FB#662	
1K220-097	569	MD軸バネ Spring. MD shaft	1		5	○		
1K220-130	636	クリックバネ Click spring	1			○		
*1K225-042-1	496	振子バネ Pendulum spring	1		5	○	FM2	
△ *1K225-045		巻き戻し軸受け、板用バネ Spring. rewind shaft bearing	1		6	○	FE. FE2	
1K225-051	305	遅延バネ Spring. deray segment	1	1B670-033-5 1B670-034-5	8	○△	FG	
1K225-059S	251	ミラーアップバネ Mirror-up spring	1	1B060-137-5	7	○	RP-9020	
1K225-063-3 (1K225-063)	154	モードバネ Mode changeover spring	1	1B150-018-7 1B150-042	12	○△		
1K225-064	391	fo レバーバネ fo lever spring	1	1B670-033-5 1B670-034-5	11	○△		
1K225-065	560	レリーズ板バネA Spring A. release plate	1		4	○		

部品表 Parts List

FAA16001-R. 3130. A

部品番号 Part No.	補助番号 Ckt No.	名称 Name	1台分個数 Q'ty Per Unit	部組品番号 Assembly	参照図番 Fig. No.	販売区分 Term of Delivery	備考 Remarks	要求単位 Q'ty per order
1K225-066	561	レリーズ板バネB Spring B. release plate	1		4	○		
1K225-075-1	379	引張バネ Spring	1	1B670-033-5 1B670-034-5	10	○△	RP-8501 FE2	
*1K230-025-1	545	後幕SWレバーバネ Spring. closing curtain switch lever	1		5	○		
1K230-039	406	レバー戻しバネ Spring. film-advance lever reverse	1	1B060-139-8 1B060-144-8	3	○△	FE2	
*1K230-041	516	スプロストッパー戻しバネ Spring. sprocket stopper reverse	1	1B001-313-5	2	○△	FE2	
*1K230-054	216	掛け外しレバーバネ Spring. latch lever	1	1B060-137-5	7	○△		
*1K230-065-1 (1K230-065)	325	制御ギアバネ Spring. control gear	1	1B060-138-8	8	○△		
*1K230-067	332	45° 受けレバーバネ Spring. 45° acceptor	1	1B060-138-8	8	○△		
1K230-087	206	ミラースタートバネ Spring. mirror-up start	1	1B060-137-5	7	○△		
1K230-088	222	連結レバーバネ Spring. coupling lever	1	1B060-137-5	7	○△		
1K230-089	226	シーソーレバーバネ Spring. see-saw lever	1	1B060-137-5	7	○△		
1K230-090	230	シャッターレリーズレバーバネ Spring. shutter release lever	1	1B060-137-5	7	○△		
1K230-091	234	制御スタートレバーバネ Spring. release control lever	1	1B060-137-5	7	○△		
1K230-093	271	チリトリバネ Spring. mirror holder	1	1B670-033-5 1B670-034-5	9	○△		
1K230-094	292	絞り込みレバーバネ Spring. stop-down lever	1	1B670-033-5 1B670-034-5	11	○△		
1K230-097-2	162	Tフィルム用バネ Spring. shutter speeds inner indicator	1	1B150-018-1 1B150-042	12	○△		
1K230-098-3 (1K230-098-1)	333	ダウンバネ Mirrow down spring	1	1B670-033-5 1B670-034-5	8	○△		
1K230-099	348	Fmm信号レバーバネ Spring. focal length(Fmm) signal lever	1	1B060-138-8	8	○△		
1K230-100	627	電源切り換えバネ Spring. power switch	1	1B060-084-2	12	○△		

部品番号 Part No.	補助番号 Ckt No.	名称 Name	1台分個数 Q'ty Per Unit	部組品番号 Assembly	参照図番 Fig. No.	販売区分 Term of Delivery	備考 Remarks	要求単位 Q'ty per order
1K230-101	444	レリーズロックレバーバネ Spring. release lock lever	1	1B060-139-8 1B060-144-8	3	○△		
1K230-102-1	500	ロックレバーバネ Spring. lock lever	1		5	○		
1K230-103	534	ミラーチャージレバーバネ Spring. mirror charge lever	1		5	○		
*1K230-114 1K230-076-2	413	カウンターバネ Spring. frame counter	1	1B060-139-8 1B060-144-8	3	○△	FE2 RP-8335 OLD Add.	
*1K233-016-2 (1K233-016-1)	129	ペンタ押さえバネ Spring. prism retainer	2		13	○	FM2	
*1K240-064-1	656	クランク受けバネ Rewind crank spring	1		6	○	FM2	
*1K240-065-1	394	バヨネットバネ Bayonet spring	1	1B670-033-5 1B670-034-5	10	○△	FM2	
*1K240-118-4 (1K240-118-3)	102	シューバネ(白) Shoe contact sping	1	1B670-023-9 1B670-062	15	○△	RP-8439 FG. FE2 Add.	
1K240-151	105	ホットシューSW接片 Shoe switch contact	1	1B670-023-9 1B670-039 1B670-062 1B670-063	15	○△		
*1K240-156	124	スクリーン押さえバネ Spring. focusing screen lock	1	1B670-033-5 1B670-034-5	11	○△	FE2	
1K240-169-2 (1K240-169)	440	カウンターSW接片 Contact. frame counter switch	1	1B060-139-8 1B060-144-8	3	○△		
1K240-237	443	クリックレバーバネ Click lever spring	6	1B060-139-8 1B060-144-8	3	○△		
*1K240-215-3 (1K240-215-2)	102	シューバネ(黒) Shoe contact spring(black)	1	1B670-039 1B670-063		○△	RP-8757 FE2 Add.	
1K260-052-1 (1K260-052)	454	巻上げギア Film-advance gear	1		2	○	FM2	
*1K260-056	463	スプロケット上ギア Sprocket upper gear	1		1	○	FE2	
1K260-076	389	foギア fo gear	1	1B670-033-5 1B670-034-5	11	○△		
1K273-002	385	fo固定ギア fo retaining gear	1	1B670-033-5 1B670-034-5	11	○△		

部品表 Parts List

FAA16001-R. 3130. A

部品番号 Part No.	補助番号 Ckt No.	名称 Name	1台分個数 Q'ty Per Unit	部組品番号 Assembly	参照図番 Fig. No.	販売区分 Term of Delivery	備考 Remarks	要求単位 Q'ty per order
*1K275-010-1 (1K275-010)	465	スプロケット Sprocket	1		1	○	FM2	
*1K275-026-1 (1K275-026)	412	ラチェット Ratchet	1	1B060-139-8 1B060-144-8	3	○△	FM2	
*1K300-034	461	スプロケット制限カム Sprocket stopper cam	1		1	○	FM2	
*1K310-024	221	制御連結レバー Lever. shutter control Coupling	1	1B670-033-5 1B670-034-5	11	○△		
1K310-037	554	メカシーソーレバー See-saw lever. mechanical release	1	1B670-033-5 1B670-034-5	11	○△		
△ *1K310-038		開閉ロックレバー Lock lever	1		6	○	RP-9459 FE2	
*1K314-050	53	止め爪B Latch B. camera back	1		16	○	FM2	
*1K314-051-3 (1K314-051-1)	494	振り子 Pendulum	1		5	○	FM2	
1K314-116	235	レリーズMg 連結レバー Lever. release magnet coupling	1	1B060-137-5	5	○△		
1K314-117-1	236	駆動レバー Actuating lever	1	1B314-037-1	7	○△	58P-1041 RP-8342 Add.	
1K314-129-2	498	ロックレバー Lock lever	1		5	○		
1K314-131-1 (1K314-131)	539	ミラーチャージレバー Mirror charge lever	1		5	○		
1K340-051-1 (1K340-051)	566	MD軸受 Bearing MD shaft	1		5	○		
1K340-052-1 (1K340-052)	581	かぶせレリー環 Shutter release button ring	1	1B670-023-9 1B670-039 1B670-062 1B670-063	15	○△		
*1K362-007-1	68	蝶番芯金B Hing shaft B	1	1B620-014-5	17	○△	FM2	
1K362-017	372	着脱ピン Lens release pin	1	1B670-033-5 1B670-034-5	10	○△		
*1K370-194	143	データト接点 Data back contact (positive)	1		16	○	FM2	
1K370-358-1	145	データ 接点 Data back contact (negative)	1		16	○	RP-8429 FM2 OLD	

部品番号 Part No.	補助番号 Ckt No.	名称 Name	1台分個数 Q'ty Per Unit	部組品番号 Assembly	参照図番 Fig. No.	販売区分 Term of Delivery	備考 Remarks	要求単位 Q'ty per order
B1-20045FA	745	Screw	1		5	○		
K1-14018FB	733	Screw	2	1B150-018-7 X2 1B150-042	12	○△		
K1-14025FB	732	Screw	2	1B150-018-7 X2 1B150-042	12	○△		
K2-14015FA	770	Screw	3		1	○		
G1-17055FB	765	Screw	1		13	○		
G1-20050FC	266	Screw	1	1B060-144-8	3	○△	RP-8348	
P1-10080FX	685	ピン Pin	1		6	○		
P3-16060SX	87	ピン Pin	2	1B670-033-5 1B670-034-5	4, 13	○△		
S1-00800SX	717	止め輪 Snap ring	1	1B670-033-5 1B670-034-5	10	○△		
S1-01200SB	729	止め輪 Snap ring	1	1B150-018-7 1B150-042		○△		
S1-01200SX	716	止め輪 Snap ring	7	1B060-138-8 X6 1B670-023-9 1B670-039 1B670-062 1B670-063	8, 12 15	○△		
S1-02000SX	783	止め輪 Snap ring	1	1B670-023-9 1B670-039 1B670-062 1B670-063	15	○△		
*1G551-004-1	G1	ミラー Mirror	1	1B100-130	9	○△	FE2	
*1G950-004-1 (1G950-004)	G	フォーカシングスクリーン Focusing screen	1		9	○	FM2	

部組品表 Sub Assembly List

FAA16001-R. 3130. A

部品番号 Part No.	補助番号 Ckt No.	名称 Name	1台分個数 Q'ty Per Unit	大部組品番号 Main Assembly No.	参照図番 Fig. No.	備考 Remarks	要求単位 Order Unit Q'ty
*1B001-085	B85	吊環 Eyelet	2	1B670-034-5 1B670-033-5	4.13	FM2	
*1B001-099-4 (1B001-099-1)	B121	スクリーン枠 Focusing screen frame	1	1B670-034-5 1B670-033-5	9	FM2	
*1B001-132-3 (1B001-132-1)	B4472	スプール軸 Spool shaft	1		1.2	FM2	
1B001-237-1	B27	半固定カバー Cover variable resistors	1		13		
1B001-238-2 (1B001-238)	B280	ミラー軸板 Mirror axle plate	1	1B060-138-8	8		
1B001-239-3 (1B001-239)	B294	絞り込み駆動レバー Lever. stop-down	1	1B670-034-5 1B001-239	11		
1B001-240-1 (1B001-240)	B338	ミラー遮光板 Light baffle plate. mirror	1	1B060-138-8	9		
1B001-245-1 (1B001-245)	B551	レリーズマグネットユニット Unit. release magnet	1	1B670-034-5 1B670-033-5	12		
1B001-247-1	B628	圧接基板 Acceptor. FPC holder C	1		14		
1B001-248-1 (1B001-248)	B673	ASAブラシ ASA base plate brush	1	1B060-141-5	6		
1B001-249-3 (1B001-249-1)	B33	アイピース基板 Eyepiece base plate	1	1B670-023-9 1B670-039	15		
1B001-250A	B100	シャッター Shutter assembly	1		4	RP-9405	1
1B001-252-4 (1B001-252-1)	B395	シャッター遮光板 Light baffle plate. shutter	1	1B670-034-5 1B670-033-5	9		
1B001-253-3 (1B001-253)	B541	後幕SW基板 Closing curtain switch	1		5		
1B001-254-1	B549	後幕SW基板 Closing curtain switch	1		5		
△ 1B001-256-5S		ASA ダイヤル基板 Base plate. ASA dial	1		6		
1B001-296-4 (1B001-296)	B103	シュー座モールド Shoe mount	1	1B670-039 1B670-023-8	15		
1B001-297-3		上地板 MD・SW MD SW. film-advance lever	1			Add.	
*1B001-604-1	B522	スプール上ギア Spool upper gear	1			RP-9036 New FM2 Add.	

Change page(差し替え) △×1

OCT. 26. 1994

部品番号 Part No.	補助番号 Ckt No.	名称 Name	1台分個数 Q'ty Per Unit	大部組品番号 Main Assembly No.	参照図番 Fig. No.	備考 Remarks	要求単位 Order Unit Q'ty
1B001-313-6 (1B001-313-1)	B2501	下地板 Unit. film-advance mechanism	1		2	FE2 New FM2	
△ 1B001-338	B362	圧接ゴムホルダーA FPC holder A	1		14	RP-9440 1K115-418 にて対応方 CORRECTED	
1B001-339-2	B364	圧接ゴムホルダーB FPC holder B	1		14	RP-8526 Add.	
1B001-342	B630	圧接ゴムホルダーC FPC holder C	1		14		
1B001-343	B691	圧接ゴムホルダーD FPC holder D	1		14		
1B001-549	B109	シュー接点モールド Shoe contact mold	1			60F-1006 Add.	
1B060-078-5 (1B060-078-1)	B136	電池ケース Battery chamber	1		4		
1B060-080-3 (1B060-080-1)	B255	ミラーSWモールド Mirrow swicth	1	1B060-137-5	7		
1B060-081-3 (1B060-081-1)	B297	絞り込みプリント板座 Base. stop-down printed circuit	1	1B670-033-5 1B670-034-5	11		
1B060-082-4 (1B060-082-2)	B336	SPDホルダー SPD holder	1	1B060-138-8	8		
1B060-083-1	B343	C・P切り替えスイッチ Meter mode swicth	1	1B670-033-5 1B670-034-5	13		
1B060-084-6 (1B060-084-2)	B622	電源SW切り替え基板 Power switch	1	1B670-033-5 1B670-034-5	12		
1B060-085-4 (1B060-085-2)	B681	LEDホルダー LED holder	1	1B670-033-5 1B670-034-5	12		
1B060-105-4 (1B060-105-1)	B355	EE識別スイッチ EE lens switch	1	1B670-033-5 1B670-034-5	11		
1B060-135-3 (1B060-135)	B185	グリップ Grip	1		16		
1B060-136-2 (1B060-136-1)	B327	制御Mg Aperture control magnet	1	1B060-138-8	8		
1B060-220-1 (1B060-137-4)	B2201	I基板 Base plate I	1	1B670-033-5 1B670-034-5	7. 9		
1B060-271-2 (1B060-138-7)	B2301	L基板 Base plate L	1	1B670-033-5 1B670-034-5	8. 9		

部組品表 Sub Assembly List

FAA16001-R. 3130. A

部品番号 Part No.	補助番号 Ckt No.	名称 Name	1台分個数 Q'ty Per Unit	大部組品番号 Main Assembly No.	参照図番 Fig. No.	備考 Remarks	要求単位 Order Unit Q'ty
1B060-208-3 (1B060-139-7)	B2416	上地板 Unit. film-advance lever	1		3		
1B060-219-4 (1B060-140-3)	B2604	Tダイアル基板 Shutter dial unit	1	1B670-033-5 1B670-034-5	12		
1B060-222-1 (1B060-141-7)	B2661	ASAダイアル基板 ASA dial unit	1		6	RP-9128 Add.	
1B060-209-3 (1B060-144-8)	B2416	上地板(黒) Unit. film-advance lever	1			Add.	
1B060-223-1	B128	ラグ板 Lug plate	1			RP-8840 60F1006 Add.	
1B100-128-3 (1B100-128-2)	B171	ミラー調整板B Mirror adjusting plate B	1		12		
1B100-130-4 (1B100-130)	B272	ミラー座取り Mirror holder	1	1B670-033-5 1B670-034-5	9		
1B100-177-8 (1B100-177-4)	B22	エプロン(白) Apron (white)	1	1B670-033-5	10		
1B100-213-5 (1B100-213-2)	B22	エプロン(黒) Apron (black)	1	1B670-034-5			
1B150-023-6 (1B150-023-2)	B120	接眼モールド Eyepiece mold	1		13		
1B150-042-3 (1B150-042)	B2151	表示板 Unit. LCD viewfinder	1	1B670-033-5 1B670-034-5	12	60F1006 Add.	
1B206-013-1	B264	セルフレバー Self-timer lever	1	1B670-033-5 1B670-034-5	13		
1B206-014-2	B401	巻上げレバー(白) Film-advance lever(white)	1		3		
1B206-016-2	B401	巻上げレバー(黒) Film-advance lever(brack)	1		3		
1B208-011-2	B341	C・P切り替え釦 Meter mode button	1	1B670-033-5 1B670-034-5	13		
*1B260-003	B310	フライホイル Flywheel	1	1B060-138-8	8	FG	

部組品表 Sub Assembly List

FAA16001-R. 3130. A

部品番号 Part No.	補助番号 Ckt No.	名称 Name	1台分個数 Q'ty Per Unit	大部組品番号 Main Assembly No.	参照図番 Fig. No.	備考 Remarks	要求単位 Order Unit Q'ty
1B260-004-1 (1B260-004)	B319	制御セグメントギア Aperture control segment gear	1	1B060-138-8	8	FG	
1B260-005	B302	セグメント遅延ギア Delay sebment gear	1	1B060-138-8	8	FG	
1B273-001-1	B386	fo ブラシギア fo brush gear	1	1B670-033-5 1B670-034-5	11		
*1B277-005-1 (1B277-005)	B323	制御ギア Aperture control gear	1	1B060-138-8	8	FG. F-301	
*1B277-006	B308	遅延ギア Delay gear	1	1B060-138-8	8	FG	
*1B277-012	B304	制御ラチェット Aperture control ratchet	1	1B060-138-8	8	F-301	
*1B300-007-7 (1B300-007-1)	B480A	~~セットカムA~~ Set cam A	~~0~1~~		1	RP-8417 Dis.	
*1B300-008-8 (1B300-008-2)	B480B	~~セットカムA~~ Set cam B	~~0~1~~		1	RP-8417 Dis.	
*1B300-009-8 (1B300-009-1)	B480C	~~セットカムC~~ Set cam C	~~0~1~~		1	RP-8417 Dis.	
*1B300-010-9 (1B300-010-2)	B480D	~~セットカムD~~ Set cam D	~~0~1~~		1	RP-8417 Dis.	
*1B300-018-2 (1B300-018)	B480	セットカム Set cam	0~1		1	FE2. NewFM2 Add.	
*1B300-020-1 (1B300-020)	B480	セットカム Set cam	0~1	1B300-018-1 との調整用	1	FE2. NewFM2 Add.	
*1B300-021-1 (1B300-021)	B480	セットカム Set cam	0~1		1	FE2. NewFM2 Add.	
1B310-029	B223	絞り制御横軸 Aperture control shaft	1	1B670-033-5 1B670-034-5	9		
△ 1B310-030	B688	~~開閉ロックレバー~~ Rever. rewind knob lock	1		6	RP-9459	
*1B314-049	B654	巻き戻しクランク Rewind crank	1		6	FM2. NewFM2	
*1B314-073-2 (1B314-073-1)	B236	制御スタートレバー Control start lever	1	1B060-137-5	7		
1B314-074	B268	セルフカム Self-timer cam	1	1B670-033-5 1B670-034-5	13		
1B314-075-1	B535	シャッターチャージレバー Shutter charge lever	1		1		

Change page(差し替え) △×1

OCT. 26. 1994

部組品表 Sub Assembly List

FAA16001-R. 3130. A

部品番号 Part No.	補助番号 Ckt No.	名称 Name	1台分個数 Q'ty Per Unit	大部組品番号 Main Assembly No.	参照図番 Fig. No.	備考 Remarks	要求単位 Order Unit Q'ty
1B314-076-1	B544	二重巻上防止レバー Lever. double exposure preventing	1		5		
1B314-077	B552	メカレリーズレバー Mecanical release lever	1	1B670-034-5 1B670-033-5	11		
1B314-078-4 (1B314-078-2)	B349	Fmm 信号レバー Focal length (Fmm) signal lever	1	1B060-138-8	8		
1B314-079-4 (1B314-079-1)	B556	レリーズ板A Release plate A	1		4		
*1B340-001-3 (1B340-001-2)	B4474	スプール軸受 Bearing. spool shaft	1		1	FM2	
*1B400-001-2 (1B400-001-1)	B77	シンクロターミナル Sync terminal	1		6	FM2	
*1B467-007-2 (1B467-007-1)	B137	電池キャップ Battery chamber lid	1		5	FM2	
1B470-004-5 (1B470-004-2)	B164	Tフィルム Shutter speeds inner indicator	1		1.2		
1B475-021-4 (1B475-021-3)	B350	Tダイアル Shutter dial	1			Add.	
*1B620-037 (1B620-014-2)	B25	裏蓋 Camera back	1		17	FM2	
*1B630-009	B457	スプール Spool	1		1	FE2. NewFM2	
1B640-017-4 (1B640-017-3)	B382	絞り連動環B Aperture coupling B	1	1B670-034-5 1B670-033-5	10		
1B670-014-5 (1B670-014)	B24	底カバー (白) Bottom cover (white)	1		5		
1B670-025-1 (1B670-025)	B24	底カバー (黒) Bottom cover (black)	1		5		
1B670-023-9 (1B670-023-8)	B23	上カバー (白) Top cover (white)	1		15	60F-1006 1B670-062-7 にて対応 OLD	
1B670-039 (1B670-024-9)	B23	上カバー (黒) Top cover (black)	1		15	60F-1006 1B670-063-7 にて対応 OLD	
1B670-065-8 (1B670-026-9)	B2026	前ボディ (白) Unit. front plate (white)	1		7 10 11 12 13		
1B670-066-8 (1B670-027-9)	B2026	前ボディ (黒) Unit. front plate (black)	1				

部品表 Parts List

FAA1600I-R. 3130. A

部品番号 Part No.	補助番号 Ckt No.	名称 Name	1台分個数 Q'ty Per Unit	部組品番号 Assembly	参照図番 Fig. No.	販売区分 Term of Delivery	備考 Remarks	要求単位 Q'ty per order
*1K100-035-1 (1K100-035)	89	三角環 Neck-strap ring	2		4.13	○	FM2	
1K100-051	263	連結ワイヤー Wire.release magnet	1	1B670-033-5 1B670-034-5	12	○△		
1K110-102-2 (1K110-102)	30	グリップ擬革 Leatherette.grip	1	1B060-135	16	○△		

部品表の部品番号及び部組品一覧表の部組品番号欄にある(　　)内の図番は，部品課から出庫されるＲＰの包装ラベルに表示されている図番(在庫管理部品)で，各々共通部品です。

＊ COMMON PART AND RP CODE

A code in parenthesis under part number is for common part. This RP code is to be printed on package label.

〔1〕 部品対照表 Parts Number Reference Table

補助番号 Auxiliary Number	部品番号 Part Number	補助番号 Auxiliary Number	部品番号 Part Number	補助番号 Auxiliary Number	部品番号 Part Number
G 1	1G551-004-1	44	1K680-218	94	1K115-190
G 2	1G950-004-1	45	1K680-219	95	1K115-427
G 3	1G415-005	46	1K115-659	96	1K115-428
G 4	1G104-020	48	1K240-049	97	1K115-429
G 5	1G247-019	51	1K610-168	98	1K630-159
G 6	1G218-002	53	1K314-050	99	1S705-035
G 7	1G710-003	54	1K610-359	101	1K406-014
G 8	1G118-003	57	1K115-660	102A	1K240-118-2
G 9	1G480-013	58	1K220-038-1	102B	1K240-215-1
G 10	1G550-012	59	1K240-033-1	103	1K680-205-1
G 11	1G550-013	63	1K115-610	104	1K370-434-1
G 12	1G550-014	64	1K115-761	105	1K240-151
G 13	1G550-015	68	1K362-007-1	106	1K370-435-1
G 14	1G950-023-1	70	1K115-301-1	107	1K600-187
G 15	1G950-024-1	71	1K115-154	108	1K115-412
		72	1K115-155	109	1K680-206
		73	1K115-156	110	1K240-152
21	1K660-027-2	74	1K115-157	111	1K240-153-3
22	1K080-012-4	75	1K123-034	112	1K240-154-3
23	1K670-016-2	76	1K220-031	113	1K240-155
24	1K620-062	78	1K115-753	115	1K115-773
26	1K670-017-1	79	1K467-030	116	1K600-289
27	1K625-025-1	80	1K640-279	117	1K600-290
28	1K680-217	81	1K640-187-1	118	1K610-377-1
29	1K640-298	82	1K370-189	119	1K610-378
30	1K110-102	83	1K640-188	120	1K500-222-1
31	1K370-523	84	1K060-005-1	124	1K240-156
32	1K206-015	85	1K100-034	125	1K620-063
33	1K610-358	86	1K044-001	126	1K576-036
34	1K340-049	87	P3-16060SX	127	1K680-318
35	1K570-025-1	88	1K467-016	128	1K610-489
36	1K570-026	89	1K100-035	129	1K233-016-2
37	1K370-451	90	1K080-005	130	1K115-473
38	1K370-452	91	1K400-078	131	1K550-008
42	1K625-007-2	92	1K115-186	132	1K680-307
43	1K115-658	93	1K115-189	133	1K115-781

部品対照表 Parts Number Reference Table

補助番号 Auxiliary Number	部品番号 Part Number	補助番号 Auxiliary Number	部品番号 Part Number	補助番号 Auxiliary Number	部品番号 Part Number
134	1K115-782-1	173	1S268-002-1	221	1K310-024
135	1K050-033	174	1K115-415	222	1K230-088
136	1K680-208	175	1S758-001-1	223	1K370-412
138	1K610-173	176	1S705-011	224	1K370-413
140	1K240-050-1	177	1K630-148	225	1K314-114
141	1K048-022	178	1S260-007	226	1K230-089
142	1K610-174	179	1K610-345-1	227	1K314-115
143	1K370-194	180	1K115-416-1	228	1K370-414
144	1K630-081-1	181	1K115-783	229	1K640-273
145	1K370-358-1	182	1K048-033	230	1K230-090
146	1K370-521-1	183	1K165-026	231	1K370-415
147	1K146-016	185	1K680-209	232	1K340-044-1
148	1K115-414	186	1K620-059	233	1K136-014
149	1K115-603	187	1K380-013	234	1K230-091
151	1K610-337-1	188	1K150-024	235	1K314-116
152	1K610-338-1	189	1K130-128	236	1K314-117
153	1K370-436	201	1K610-313-2	237	1K314-118
154	1K225-063	202	1K310-023-2	238	1K314-119-1
155	1K610-339	203	1K050-060	239	1K370-414
156	1K610-340	204	1K370-291	240	1K366-029
157	1K370-437-1	205	1K370-298	241	1K370-417
158	1K230-096	206	1K230-087	242	1K340-045
159	1K370-438	207	1K370-293	243	1K230-092
160	1K275-017-2	208	1K330-003	244	1K314-120
161	1K370-439-1	209	1K330-004	245	1K370-418
162	1K230-097-2	210	1K314-112	246	1K370-301
163	1K050-111	211	1K370-294	247	1K314-121
164	1K470-013-1	212	1K640-238	248	1K366-030
165	1K610-341-1	213	1K370-296-1	249	1K370-292
166	1K370-458	214	1K370-411	250	1K366-031
167	1K275-019	215	1K370-297	251	1K225-059-1
168	1K610-342-2	216	1K230-054	252	1K240-137
169	1K048-023	217	1K314-113	253	1K240-138-1
170	1K610-343-2	218	1K680-143	254	1K240-139
171	1K610-344-1	219	1K366-015	255	1K680-200
172	1K680-238-1	220	1K340-043	256	1K600-182

部品対照表 Parts Number Reference Table

補助番号 Auxiliary Number	部品番号 Part Number	補助番号 Auxiliary Number	部品番号 Part Number	補助番号 Auxiliary Number	部品番号 Part Number
257	1K115-394	296	1K048-020	344	1K240-207
258	1K370-246-1	297	1K610-317	345	1K370-441
259	1K370-245-2	298	1S700-024-1	346	1K630-149
260	1K130-084	299	1K048-021	347	1K120-153
261	1K314-122	301	1K610-347	348	1K230-099
262	1K370-300	304	1K370-295-1	349	1K314-125-1
263	1K100-051	305	1K225-051	350	1S700-025-1
265	1K640-274	306	1K370-311-1	351	1K240-157-1
266	1K115-395	311	1K314-092	352	1K048-052
267	1K156-017	312	1K366-019-1	353	1K240-158
268	1K610-314	313	1K370-440-1	354	1K048-024
269	1K625-006-1	314	1K314-093	355	1K620-061
270	1K115-391-1	315	1K370-313-1	356	1K370-442-1
271	1K230-093	316	1K310-030	357	1K220-089
272	1K610-177	317	1K630-104	358	1K146-028
273	1K115-220-3	318	1K370-314	359	1K240-239
274	1K240-054-1	321	1K370-315-1	360	1K115-489
275	1K240-055-1	322	1K260-035	361	1K610-348
276	1K370-217	324	1K370-316-1	362	1K610-349
277	1K370-204	325	1K230-065-1	363	1K115-418
278	1K600-183	326	1K370-317-1	364	1K610-350
279	1K370-420	327	1B060-136-1	365	1K115-419
280	1K610-315	329	1K366-020	366	
281	1K370-421	330	1K314-124	367	1K115-421
282	1K370-422	331	1K370-319	368	1K600-188-1
283	1K610-170	332	1K230-067	369	1K366-034-2
284	1K115-191-1	333	1K230-098-1	370	
285	1K115-396	334	1K050-062	371	1K600-198
286	1K130-123	336	1K680-144-1	372	1K362-017
289	1K120-098	337	1K240-088	373	1K600-254
290	1K206-017-1	338	1K680-229	374	1K156-020
291	1K610-316	339	1K115-417	375	
292	1K230-094	340	1K275-018	376	1K600-223
293	1K156-018-1	341	1K208-028	377	1K130-140
294	1K314-123-1	342	1K220-101	378	1K220-095
295	1K240-140	343	1K680-248	379	1K225-075-1

部品対照表 Parts Number Reference Table

補助番号 Auxiliary Number	部品番号 Part Number	補助番号 Auxiliary Number	部品番号 Part Number	補助番号 Auxiliary Number	部品番号 Part Number
380	1K370-567	427	1K370-446	470	1K630-114
381	1K640-464	428	1K680-169-2	471	1K630-085
383	1K240-159-2	429	1K260-077	473	1K230-044-2
384	1K680-211	430	1K370-468	474	1K640-282
385	1K273-002	431	1K260-078	475	1K640-283
389	1K260-076	432	1K240-180	476	1K230-105
391	1K225-064	433	1K370-371-1	476	1K110-082
392	1K610-353	434	1K314-080	477	1K640-196
393	1K404-036	435	1K340-026	478	1K078-007
394	1K240-065-1	436	1K680-222	485	1K240-240
398	1K115-672	437	1K680-270	486	1K240-241
399	1K115-673	439	1K240-168	487	1K680-269-1
400	1K115-674	440	1K240-169	488	1K115-529
401A	1K206-012	441	1K370-469-1	489	1K680-271
401B	1K206-020	442	1K115-430-1	491	1K340-020
402A	1K146-040	443	1K240-237	492	1K115-433
402B	1K146-041	444	1K230-101	493	1K680-102-3
403	1K115-198	445	1K610-270	494	1K314-051-3
404	1K206-013-2	446	1K370-520-1	495	1K650-003-1
405	1K150-008	447	1K600-253	496	1K225-042-1
406	1K230-039	451	1K610-272-2	497	1K610-266-1
407	1K640-253	452	1K610-271-1	498	1K314-129-2
409	1K083-024-1	453	1K680-170-1	499	1K146-047-1
410	1K610-380-1	454	1K260-052-1	500	1K230-102-1
411	1K050-157	455	1K130-098	510	1K050-072
412	1K275-026-1	456	1K680-172-1	516	1K230-041
413	1K230-114	460	1K120-053	518	1K610-278
414	1K475-158-1	461	1K300-034	519	1K120-054
415	1K480-005	462	1K370-367	525	1K220-064
420	1K230-077	463	1K260-056	526	1K640-199
421	1K314-140	464	1K640-198	529	1K610-172-1
422	1K050-058	465	1K275-010-1	533	1K130-132
423	1K314-137	466	1K130-097	534	1K230-103
424	1K130-175-1	467	1K220-039	535	1K314-054-1
425	1K230-116-1	468	1K050-074	536	1K370-198
426	1K314-128	469	1K130-096	537	1K370-199-1

部品対照表　Parts Number Reference Table

補助番号 Auxiliary Number	部品番号 Part Number
538	1K640-317-1
539	1K314-131
540	1K130-056-1
541	1K610-364
542	1K370-200-1
543	1K314-132-1
544	1K314-133
545	1K230-025-1
546	1K115-193
547	1K240-170-1
548	1K240-171
549	1K680-223
550	1K340-050-1
552	1K314-134
553	1K366-033
554	1K310-037
555	1K130-133
556	1K314-135
557	1K370-453
558	1K048-028
559	1K240-172
560	1K225-065
561	1K225-066
562	1K314-136
563	1K130-134
564	1K130-135
565	1K370-454
566	1K340-051
567	1K370-455
568	1K240-173
569	1K220-097
571	1K240-174
572	1K048-029
573	1K048-030
575	1K115-432
577	1K165-052-1

補助番号 Auxiliary Number	部品番号 Part Number
580	1K630-152-1
581	1K340-052
582	1K208-023
583	1K370-456
584	1K040-001-1
585	1K220-092-1
586	1K370-457-1
588	1K610-365
589	1S700-028
601	1K201-025-1
602	1K470-014
603	1K206-011-1
604	1K610-354
605	1K340-046
606	1K370-443-1
607	1K314-126
608	1K370-444
609	1K370-445
610	1K048-025
611	1K340-047
612	1K370-446-1
613	1K610-355
614	1K240-161
615	1K048-026-1
616	1K208-025
617	1K078-003
618	1K220-090
619	1K680-212-1
620	1K240-162
621	1K150-025
622	1K610-356
623	1K680-213
624	1K240-163-1
625	1K370-447
626	1K048-027
627	1K230-100

補助番号 Auxiliary Number	部品番号 Part Number
628	1K600-189
629	1K630-150-1
630	1K610-357
631	1K115-422
632	1K208-021-1
633	1K220-091
634	1K130-142
635	1K370-505
636	1K220-130
637A	1K083-019
637B	1K083-043
638	1K115-423-1
639	1K115-424
640	1S700-027
651	1K680-214
652	1K370-449
653	1K083-020
655	1K225-045
656	1K240-064-1
657	1K201-014
659	1K060-020
660	1K160-249
661	1K610-360-1
662	1K220-096-1
663	1K201-026
664	1K600-190
665	1K630-157
666	1K470-015
667	1K640-278
668	1K610-361
669	1K610-362-1
670	1K208-022-1
671	1K370-450
672	1K340-048-2
673	1K680-215
674	1K240-164

部品対照表 Parts Number Reference Table

補助番号 Auxiliary Number	部品番号 Part Number
675	1K246-016
676	1K680-216
677	1K240-165
678	1K240-166
679	1K115-425
680	1S705-012-1
681	1K580-005
682	1K083-021-1
683	1S260-010
684A	1K083-022
684B	1K083-044
685	P1-10080FX
686	1K083-023
687	1K160-253
689	1K130-141
690	1K370-479
691	1K610-363
692	1K115-426
693	1K610-441-1
701	A1-17030FA
702	B1-17030FA
703	A1-14014FA
704	A1-20030FA
705	1K120-100
706	1K126-015
707	1K060-018
708	A1-17025FB
709	1K120-141
710	B1-14045FA
711	A1-17040FB
712	B1-14020FA

補助番号 Auxiliary Number	部品番号 Part Number
713	B1-17035FB
714	K1-14050FB
715	B1-17018FA
716	S1-01200SX
717	S1-00800SX
718	1K050-022
718	1K050-112
718	1K050-144
719	A1-20028FB
720	A2-17030FB
721	1K060-008
722	B1-17020FB
723	A2-17020FB
724	1K120-003
725	1K060-010
726	A1-17035FB
727	A1-20025FB
728	1K120-093
729	S1-01200SB
730	1K010-017-2
731	1K120-111
732	K1-14025FB
733	K1-14018FB
734	A1-17015FB
735	1K123-039
737	1K123-042
738	1K050-029
738	1K050-030
738	1K050-031
738	1K050-032
738	1K050-033
738	1K050-034
738	1K050-035
738	1K050-036
738	1K050-037
738	1K050-038

補助番号 Auxiliary Number	部品番号 Part Number
738	1K050-039
738	1K050-040
738	1K050-041
738	1K050-042
738	1K050-043
738	1K050-044
738	1K050-045
738	1K050-046
738	1K050-047
738	1K050-048
739	1K146-036-1
740	B2-17045FA
741	1K120-009
742	B1-20025FA
743	A1-20050FB
744	1K123-040
745	B2-20045FA
746	A1-17018FB
747	A1-20022FB
748	1K120-060-2
749	1K120-061
750	B1-20045FB
751A	A2-17025FC
751B	1K001-006-1
752A	1K120-102-1
752B	1K120-157
753A	A1-17030FC
753B	1K001-003
754	A1-17040FC
754	1K001-017
755	A1-20040FB
756	B1-17035FA
757	1K001-004
758	A1-20060FT
759	A1-20030BX
760	P3-12080SX

部品対照表 Parts Number Reference Table

補助番号 Auxiliary Number	部品番号 Part Number
761	1K060-019
762	1K050-115
763	1K120-103
764	A1-17040FA
765	G1-17055FB
766	G1-20050FC
767	1K120-158
769	1K120-063
770	K2-14015FA
771	1K060-003
772	B1-14025FA
773	1K120-106
774	1K050-075
774	1K050-076
774	1K050-077
774	1K050-078
774	1K050-079
774	1K050-080
775	1K010-027
776	1K050-153
777	1K120-112
778	1K050-073
779	B1-17025FB
780	1K044-055
781	1K165-033
782	1K120-142
783	S1-20000SX
784	1K165-051
1001	1S705-015
1002	1S705-016
1003	1S705-017

補助番号 Auxiliary Number	部品番号 Part Number
1004	1S705-018
1005	1S705-030
1007	1S700-040
1008	1S700-041
1009	1S700-042
1010	1S700-058
1013	1S708-002
1014	1S700-044
1015	1S700-045
1016	1S322-014
1017	1S700-050
1018	1S700-051
1020	1S237-034
1021	1S237-035
1022	1S237-036
1023	1S210-002
1024	1S210-003
1025	1S210-004
1026	1S700-046
1027	1S125-007
1028	1K115-465
1029	1S705-037
1030	1S250-005
1031	1S250-006
1032	1S250-008
1033	1S380-001
1034	1S125-006
1035	1S130-008-1
1036	1S110-005
1037	1S113-004
1040	1S340-022
1041	1S340-023
1042	1S340-024
1043	1S340-025
1044	1S340-026
1045	1S340-032

補助番号 Auxiliary Number	部品番号 Part Number
1050	1S335-015
1051	1S335-016
1052	1S335-017
1053	1S335-018
1055	1S335-039
1056	1S335-021
1057	1S335-037
1058	1S335-040
1059	1S300-068
1060	1S310-021
1061	1S310-055
1062	1S310-023
1063	1S310-056
1064	1S310-025
1065	1S310-026
1066	1S310-027
1067	1S310-028
1068	1S300-064
1070	1S882-003
1071	1S810-177
1072	1S810-178
1073	1S810-179
1074	1S810-180
1075	1S810-181
1076	1S810-182
1077	1S810-183
1078	1S810-184
1079	1S810-185
1080	1S810-186
1081	1S810-187
1083	1S810-189
1084	1S810-190
1085	1S810-191
1086	1S810-192
1087	1S810-193
1090	1S810-196

部品対照表 Parts Number Reference Table

補助番号 Auxiliary Number	部品番号 Part Number
1091	1S810-197
1092	1S810-198
1093	1S810-199
1094	1S810-200
1096	1S810-202
1098	1S810-204
1102	1S810-208
1103	1S810-209
1104	1S810-210
1105	1S810-211
1106	1S810-295
1108	1S810-297
1110	1S810-323
1111	1S810-336
1112	1S810-349
1113	1S810-405
1114	1S810-406
1115	1S810-439
1120	1S720-025
1121	1S720-035
1122	1S720-038
B 22A	1B100-177-4
B 22B	1B100-213-2
B 23A	1B670-023-9
B 23B	1B670-039
B 24A	1B670-014
B 24B	1B670-025
B 25	1B620-014-6
B 27	1B001-237-1
B 33	1B001-249-2
B 47	1B001-086

補助番号 Auxiliary Number	部品番号 Part Number
B 77	1B400-001-2
B 85	1B001-085
B100	1B001-250-2
B103	1B001-296-2
B109	1B060-106-5
B120	1B150-023-2
B121	1B001-099-2
B136	1B060-078-1
B137	1B467-007-2
B164	1B470-004-2
B171	1B100-128-2
B185	1B060-135
B223	1B310-029
B236	1B314-073-1
B255	1B060-080-1
B264	1B206-013-1
B268	1B314-074
B272	1B100-130
B280	1B001-238
B294	1B001-239-2
B297	1B060-081-1
B302	1B260-005
B308	1B277-006
B310	1B260-003
B319	1B260-004-1
B323	1B277-005
B327	1B060-136-1
B336	1B060-082-2
B338	1B001-240
B340	1B277-012
B341	1B208-011
B343	1B060-083-1
B349	1B314-078-2
B350	1S045-011-2
B355	1B060-105-1
B362	1B001-338

補助番号 Auxiliary Number	部品番号 Part Number
B364	1B001-339-1
B382	1B640-017-4
B386	1B273-001-1
B395	1B001-252-1
B401A	1B206-014-2
B401B	1B206-016-2
B457	1B630-009
B4472	1B001-132-3
B4474	1B340-001-2
B2501	1B001-313-5
B522	1B001-128-4
B535	1B314-075-1
B541	1B001-253-1
B544	1B314-076-1
B549	1B001-254-1
B551	1B001-245
B552	1B314-077
B556	1B314-079-2
B589	1S045-012
B622	1B060-084-2
B628	1B001-247-1
B654	1B314-049
B673	1B001-248
B1003	1S017-004
B1004	1S017-005
B1005	1S017-007
B1002	1S020-004
B31001	1S020-007
B681	1B060-085-2
B688	1B310-030
B692	1B001-343
B2026A	1B670-033-5
B2026B	1B670-034-5
	1S045-013
B2151	1B150-018-7
B2201	1B060-137-5

部品対照表 Parts Number Reference Table

補助番号 Auxiliary Number	部品番号 Part Number	補助番号 Auxiliary Number	部品番号 Part Number	補助番号 Auxiliary Number	部品番号 Part Number
B2301	1B060-138-8				
B2416	1B060-139-8				
B2604	1B060-140-3				
B2661	1B060-141-5				
B480A	1B300-007-7				
B480B	1B300-008-8				
B480C	1B300-009-8				
B480D	1B300-010-9				
L 1	1G013-013				
L 2	1G080-003				

記号説明 MARKS IN THE PARTS LIST

(1) 機械標準品

下の表に示す機械標準品の部品番号は品名、種類、呼び径、長さを示しています。

例① A2 − 14 025 FA ⟶ JCIS十字穴付きさら小ねじ1種 φ1.4×2.5

品名 A、種類 2、呼び径 14、長さ 025、FA

表(1)の部品の小数点位置

例② N1 − 020 00 FA ⟶ 六角ナット1種 φ2.0

品名 N、種類 1、呼び径 020、FA

表(2)の小数点位置で長さ表示はなし

(1) Standard mechanical parts

Reference Number in the Parts List

A. Screw · pin

A 2 − 1 4 0 2 5 F A

- Item
- Type
- Diameter
- Length

B. Nut · Washer · Snap ring

N 1 − 0 2 0 0 0 FA

- Item
- Type
- Diameter

表 1

品名 Item		種類 Type	
JCIS 十字穴付き小ねじ 1種 Cross-point screw 1	A	な べ Pan	1
		さ ら Countersunk	2
		丸さら Oval	3
JCIS 十字穴付き小ねじ 3種 〃 screw 3	B	な べ Pan	1
		さ ら Countersunk	2
		丸さら Oval	3
十字穴付き小ねじ Cross-point screw	C	な べ Pan	1
		さ ら Countersunk	2
		丸さら Oval	3
		トラス Truss	4
十字穴付き タッピンねじB型 1種 Cross-point tapped screw B1	D	な べ Pan	1
		さ ら Countersunk	2
		丸さら Oval	3
十字穴付き タッピンねじB型 3種 〃 screw B3	E	な べ Pan	1
		さ ら Countersunk	2
		丸さら Oval	3
十字穴付き タッピンねじ 2種 〃 screw 2	F	な べ Pan	1
		さ ら Countersunk	2
		丸さら Oval	3
十字穴付き タップタイトねじ B型 1種 Cross-point tap-tight screw B1	G	な べ Pan	1
		さ ら Countersunk	2
		丸さら Oval	3
十字穴付き タップタイトねじ B型 3種 Cross-point tap-tight screw B3	H	な べ Pan	1
		さ ら Countersunk	2
		丸さら Oval	3
すりわり付き止ねじ Splitted set screw	K	丸 先 Round point	1
		とがり先 Cone point	2
		くぼみ先 Half point	3

品名 Item		種類 Type	
六角穴付き止ねじ Hexagon socket head set screw	L	丸 先 Round point	1
		とがり先 Cone point	2
		くぼみ先 Half point	3
六角穴付きボルト Hexagon socket head bolt	M		1
平 行 ピ ン Straight pin	P		1
テ ー パ ピ ン Taper pin			2
スプリングピン Spring cotter		一 般 用 Normal	3
		軽荷重用 Light	4

表 2

品名 Item		種類 Type	
六 角 ナ ッ ト Hexagon nut	N	1 種 Type 1	1
		3 種 Type 3	3
平 座 金 Washer	R	小 形 丸	1
		みがき丸	2
ばね座金 Spring washer			5
止 め 輪 Snap ring	S	E 型 Type E	1
		G 型 Type G	2
		GS型 Type GS	3
鋼 球 Steel ball	T	(mm)	1
		(インチ) Inch	2
ヘ リ サ ー ト Helicert	U	(mm)	1
		(インチ) Inch	2

(2) The term of sale column 販売区分欄

Mark 記号	Explanation 説明	
○	Can be supplied individually	単独部品として販売するもの
△	Not supplied individually but only as subassembly	部組品でなければ販売しないもの
○△	Supplied either as part or subassembly	単独部品でも部組品でも販売するもの
×	Not considered as repair part	修理部品とは考えないもの
※	Should be sent to the factory if the repair is needed	単体では交換できないので、組む場合に工場での加工が必要なもの
⊠	Delivered as a product from the sales department (i.e., not supplied as repair part)	商品として販売店で販売しているもの（修理部品扱いはしない）

(3) The remarks column 備考欄

32FB1 #664	Part number used in common	共通部品番号
(Blue×125mn)	Lead wire (color×length)	コードの色と長さ
53F2013 (FM-780028)	Technical information ref. number (number in parenthesis; English edition)	製品技術資料番号、（ ）内は英文 No.
(2.1×3.8×0.007)	Washer (internal diameter ×external diameter×thickness)	ワッシャーの（内径×外径×厚さ）
(Black)	Black-finished parts	黒部品
(d=0.2)	Diameter of wire.	線径=0.2
(t=1)	Thickness	厚さ=1
Rev.	Revision	訂正
Add.	Addition	追加
Dis.	Discontinuation	廃止
Ⓟ	Plastic part	プラスチック部品
OLD	Part of the initial design	旧部品
R1…, D1… C1…, Q1… W1…, P1…	Abbreviation for electronic part	電気部品記号

＊……既出部品

部品表の部品番号及び部組品一覧表の部組品番号欄にある（　　）内の図番は，部品課から出庫されるＲＰの包装ラベルに表示されている図番（在庫管理部品）で，各々共通部品です。

＊ COMMON PART AND RP CODE
A code in parenthesis under part number is for common part. This RP code is to be printed on package label.

部品番号 Part No.	補助番号 Ckt. No.	名称 Name	1台分個数 Pcs.per Unit	部組品番号 Assembly	参照図番 Figure	販売区分 Term of Delivery	備考 Remarks
*1K001-003 ✓	753	上カバー止ネジ（黒） Screw (black)	3		15	○	
*1K001-004	757	蝶番止ネジ Screw	3		16	○	FM2
*1K001-006-1 (1K001-006)	751	底カバー止ネジ（黒） Screw (black)	3		5	○	FM2
1K001-017 ✓	754	上カバー止ネジ（黒） Screw (black)	2		15	○	
*1K010-017-2 (1K010-017)	730	LCD取付ネジ Screw	2		14	○	FM2
*1K040-001-1 (1K040-001)	584	レリーズ釦ピン Screw	1	1B670-023-9 1B670-039	15	○△	FM2
*1K050-022	718	チリトリ ワッシャー t=0.2 Washer	1	1B670-026-4 1B670-027-4	9	○△	FM2
*1K050-029	738A	プリズムボックス調整座金 t=0.05 Washer, prism box	0~4	1B670-026-4 1B670-027-4	13	○△	FM2
*1K050-030	738B	〃 t=0.06	0~4	1B670-026-4 1B670-027-4	13	○△	FM2
*1K050-031	738C	〃 t=0.07	0~4	1B670-026-4 1B670-027-4	13	○△	FM2
*1K050-032	738D	〃 t=0.08	0~4	1B670-026-4 1B670-027-4	13	○△	FM2
*1K050-033	738E 135	〃 t=0.09	0~4	1B670-026-4 1B670-027-4	13	○△	FM2
*1K050-034	738F	〃 t=0.1	0~4	1B670-026-4 1B670-027-4	13	○△	FM2
*1K050-035	738G	〃 t=0.01	0~4	1B670-026-4 1B670-027-4	13	○△	FM2
*1K050-036	738H	〃 t=0.12 Washer, prism box	0~4	1B670-026-4 1B670-027-4	13	○△	FM2

部品番号 Part No.	補助番号 Ckt. No.	名称 Name	1台分個数 Pcs.per Unit	部組品番号 Assembly	参照図番 Figure	販売区分 Term of Delivery	備考 Remarks
*1K050-037	738I	プリズムボックス調整座金 t=0.2 Washer, prism box	0～4	1B670-026-4 1B670-027-4	13	○△	FM2
*1K050-038	738J	〃 t=0.3	0～4	1B670-026-4 1B670-027-4	13	○△	FM2
*1K050-039	738K	〃 t=0.4	0～4	1B670-026-4 1B670-027-4	13	○△	FM2
*1K050-040	738L	〃 t=0.5	0～4	1B670-026-4 1B670-027-4	13	○△	FM2
*1K050-041	738M	〃 t=0.6	0～4	1B670-026-4 1B670-027-4	13	○△	FM2
*1K050-042	738N	〃 t=0.7	0～4	1B670-026-4 1B670-027-4	13	○△	FM2
*1K050-043	738P	〃 t=0.8	0～4	1B670-026-4 1B670-027-4	13	○△	FM2
*1K050-044	738Q	〃 t=0.9	0～4	1B670-026-4 1B670-027-4	13	○△	FM2
*1K050-045	738R	〃 t=1.0	0～4	1B670-026-4 1B670-027-4	13	○△	FM2
*1K050-046	738S	〃 t=1.1	0～4	1B670-026-4 1B670-027-4	13	○△	FM2
*1K050-047	738T	〃 t=1.2	0～4	1B670-026-4 1B670-027-4	13	○△	FM2
*1K050-048	738U	〃 t=0.03	0～4	1B670-026-4 1B670-027-4	13	○△	FM2
*1K050-073	778	面カム外しレバー座金 t=0.1 Washer, axle #455	1		4	○	FM2
*1K050-074	468	スプロバネ座金 Washer, sprocket spring	2		1	○	FM2
*1K050-075	774A	巻上ギア ワッシャー Washer, film-advance gear t=0.05	0～1		2	○	FM2

部品番号 Part No.	補助番号 Ckt. No.	名称 Name	1台分個数 Pcs.per Unit	部組品番号 Assembly	参照図番 Figure	販売区分 Term of Delivery	備考 Remarks
*1K050-076	774B	巻上ギア ワッシャー Washer, film-advance gear t=0.1	0～1		2	○	FM2
*1K050-077	774C	〃 t=0.2	0～1		2	○	FM2
*1K050-078	774D	〃 t=0.3	0～1		2	○	FM2
*1K050-079	774E	〃 t=0.25	0～1		2	○	FM2
*1K050-080	774F	〃 t=0.15	0～1		2	○	FM2
1K050-111	163	バネ押え座金 Washer	1	1B150-018-1	12	○△	
1K050-115	762	レリーズ釦ワッシャー Washer, release button	0～3	1B670-023-9 ×0～3 1B670-039 ×0～3	15	○△	
1K050-153-1	776	AR解除バネ、ワッシャー Washer, AR release spring	1	1B670-023-9 1B670-039	15	○△	
*1K050-112	718	ワッシャー t=0.3 Washer	0～1			○	
*1K050-144	718	ワッシャー t=0.1 Washer	0～1			○	
*1K060-008	721	ダウンバネ ワッシャー Washer, mirror down spring	1	1B670-026-4 1B670-027-4	8	○△	FG
*1K060-010	725	制御連結レバー ワッシャー Washer, lever # 221	1	1B670-026-4 1B670-027-4	9	○△	FG
*1K060-020	659	開閉ノブ押えクリップ Snap ring, o/c knob	1		6	○	35FB # 659
*1K080-005	90	三角環保護カバー Neckstrap protector	2		4、13	○	FM2
1K083-019	637A	モード指標板 Mode index plate	1	1B670-023-9	15	○△	

部品番号 Part No.	補助番号 Ckt. No.	名称 Name	1台分個数 Pcs.per Unit	部組品番号 Assembly	参照図番 Figure	販売区分 Term of Delivery	備考 Remarks
1K083-020	653	巻戻ノブ Rewind knob	1		6	○	
1K083-022	684A	補正指標板 Exposure compensation index	1	1B670-023-9	15	○△	
1K083-023	686	開閉ノブ o/c knob	1		6	○	
1K083-024-1	409	多重レバー Multi-exposure lever	1	1B670-023-9 1B670-039	15	○△	
1K083-043	637B	モード指標板 Mode index plate	1	1B670-039	15	○△	
1K083-044	684B	補正指標板 Exposure compensation index	1	1B670-039	15	○△	
*1K100-035	89	三角環 Neckstrap ring	2		4、13	○	FM2
1K100-051	263	連結ワイヤー Wire, release magnet	1	1B670-026-4 1B670-027-4	12	○△	
1K110-102	30	グリップ擬革 Leatherette, grip	1	1B060-135	16	○△	
*1K110-082	476	緩衝ゴム Shock absorber	1		5	○	FM2
*1K115-154	71	遮光モルトA Light-tight sponge A	1	1B620-014-5	17	○△	FM2
*1K115-155	72	遮光モルトB Light-tight sponge B	1	1B620-014-5	17	○△	FM2
*1K115-156	73	遮光モルトC Light-tight sponge C	1	1B620-014-5	17	○△	FM2
*1K115-157	74	遮光別珍B Light-tight cloth B	1	1B620-014-5	17	○△	FM2
*1K115-186	92	溝用モルトプレンA Sponge strip A	1		16	○	FM2

部品番号 Part No.	補助番号 Ckt. No.	名称 Name	1台分個数 Pcs.per Unit	部組品番号 Assembly	参照図番 Figure	販売区分 Term of Delivery	備考 Remarks
*1K115-189	93	溝用モルトプレンB Sponge strip B	1		16	○	FM2
*1K115-190	94	溝用モルトプレンC Sponge strip C	1		16	○	FM2
*1K115-191-1	284	ミラー制限モルト Sponge strip, mirror	1	1B670-026-4 1B670-027-4	9	○△	FM2
*1K115-198	403	巻上レバー擬革 Leatherette, Film-advance lever	1		3	○	FM2
*1K115-301-1	70	裏蓋擬革 Leatherette, camera back	1	1B620-014-5	70	○△	FM2
1K115-395	266	セルフレバー擬革 Leatherette, self-timer lever	1		13	○	
1K115-396	285	i基板遮光シート Light baffle sheet	1	1B060-137-5	7	○△	
1K115-412	108	押棒 Switch plunger	1	1B670-023-9 1B670-039	15	○△	
1K115-414	148	接眼下モルト Light-tight, eyepiece	1		4	○	
1K115-415	174	偏光板 Polarizer	1		12	○	
1K115-416-1	180	絶縁シート Insulating sheet	1		12	○	
1K115-417	339	L基板遮光シート Light baffle sheet	1	1B060-138-8	8	○△	
1K115-421-1	367	前ボディ下モルト Sponge strip	1		4	○	
1K115-427	95	擬革A Leatherette A	1		16	○	

部品番号 Part No.	補助番号 Ckt. No.	名称 Name	1台分個数 Pcs.per Unit	部組品番号 Assembly	参照図番 Figure	販売区分 Term of Delivery	備考 Remarks
1K115-428	96	擬革B Leatherette B	1		16	○	
1K115-429	97	擬革C Leatherette C	1		16	○	
1K115-432	575	MD絶縁シート Insulating sheet, MD	1		5	○	
1K115-433	492	カップリング シール Motor coupling seal	1		1	○	
1K115-473	130	ペンタ押えシート Prism retainer	1		13	○	
1K115-603	149	ハレーション防止シートA Anti-halation sheet A	1	1B670-023-9	15	○△	
1K115-610	63	半固定押えモルト Sponge strip, variable resistors	1		14	○	
1K115-659	46	アセテート テープ Tape	3			○	
1K115-753	78	漏光防止シート Light-tight sheet	1			○	
1K115-761	64	モルトプレン Light-tight sponge	1		13	○	
*1K120-003	724		1	1B060-137-5	7	○△	
1K120-009	741	レリーズMg取付ネジ Screw, release magnet	2	1B670-026-4 ×2 1B670-027-4 ×2	12	○△	
*1K120-053	460	スプロ制限止めネジ Sprocket screw	1		1	○	
*1K120-054	519	スプロ ストッパー ネジ Screw, sprocket stopper	1	1B001-313-3	2	○△	

部品番号 Part No.	補助番号 Ckt. No.	名称 Name	1台分個数 Pcs.per Unit	部組品番号 Assembly	参照図番 Figure	販売区分 Term of Delivery	備考 Remarks
*1K120-060-2 (1K120-060)	748	巻上軸ネジ Screw, film-advance shaft	2		4	○	FM2
*1K120-061	749	カップリングネジ Screw, motor coupling	1		1	○	FM2
1K115-781	133	偏光板 Polarizer	1			○	
1K115-782-1	134	スペーサー Spacer	1			○	
*1K120-063	769	下地板ネジ Screw, film-advance mechanism	3		2	○	
1K120-098	289	絞り込みレバー飾りネジ Screw, stop-down lever	1	1B670-026-4 1B670-027-4	11	○△	
*1K120-093	728	表示板止ネジ Screw, LCD plate	2	1B670-026-4 ×2 1B670-027-4 ×2	12	○△	
1K120-102-1	752	エプロン ネジ (白) Serew, apron (white)	1	1B670-026-4	10	○△	
1K120-103	763	アイピース ネジ Screw, eyepiece	1	1B670-023-9 1B670-039	15	○△	
1K120-111	731	薄形小ねじ Screw,	1	1B150-018-1	12	○△	
1K120-112	777	シャッターメインTダイヤルネジ Screw, shutter dial	2		1、4	○	
1K120-141	709	ミラーDBスイッチ ネジ Screw, mirror switch	1	1B060-137-5	7	○△	
1K120-142	782	CP、切換ネジ Screw, switch B 343	1	1B670-026-4 1B670-027-4	13	○△	
1K120-157	752	エプロン ネジ (黒) Screw, apron (black)	1	1B670-027-4		○△	

部品番号 Part No.	補助番号 Ckt. No.	名称 Name	1台分個数 Pcs.per Unit	部組品番号 Assembly	参照図番 Figure	販売区分 Term of Delivery	備考 Remarks
1K120-153	347	Fmm信号レバー止メネジ Screw, Focal length (Fmm) signal lever	1	1B060-138-8	8	○△	
1K120-158	767	薄形小ねじ Screw	1		5	○	
*1K123-034	75	裏蓋着脱ピン Pin, camera back release	1	1B620-014-5	17	○△	
*1K123-039	735	バヨネット止めネジ Set screw, bayonet	4	1B670-026-4 ×4 1B670-027-4 ×4	10	○△	
*1K123-040	744	プリズムボックスネジ Screw, prism box	1		5		
*1K123-042	737	前板取付ネジ Screw, front plate	2	1B670-026-4 ×2 1B670-027-4 ×2	13		
*1K130-056-1	540	ミラーチャージネジ Screw, shutter charge lever	1		1		
*1K130-084	260	ミラーボックス止ネジ Screw, mirror mechanism unit	1	1B670-026-4 1B670-027-4	9		
*1K130-096	469	スプロケットネジB Sprocket screw B	1		1	○	FM2
*1K130-097	466	スプロケットネジA Sprocket screw A	1		1	○	FM2
*1K130-098	455	面カム外しレバー軸 Axle, clutch cam release lever	1		4	○	FM2
1K130-123	286	ミラーボックス止ネジ Screw, mirror mechanism unit	1	1B670-026-4 1B670-027-4	9	○△	
1K130-128	189	グリップガイドネジ Grip guide screw	1		4	○	
1K130-132	533	ミラーチャージレバー軸 Axle, shutter charge lever	1		5	○	

部品番号 Part No.	補助番号 Ckt. No.	名称 Name	1台分個数 Pcs.per Unit	部組品番号 Assembly	参照図番 Figure	販売区分 Term of Delivery	備考 Remarks
1K130-133	555	メカレバー取付ネジ Screw, mechanical release lever	2	1B670-026-4 1B670-027-4	11	○△	
1K130-134	563	レリーズ板止めネジ Screw, release plate	2		4	○	
1K130-135	564	レリーズ板止めネジ Screw, release plate	1		4	○	
1K130-140	377	着脱釦軸 Axle, lens release button	1	1B670-026-4 1B670-027-4	10	○△	40 F B # 725
*1K130-141	689	開閉ロックレバー軸 Axle, o/c lock lever	1		6	○	35 F B # 688
1K130-142	634	M2、段付ネジ Screw	1	1B670-026-4 1B670-027-4	12	○△	
1K130-175-1	424	スイッチレバーBカシメ軸 Axle, switch lever B	1		3	○	
1K136-014	233	制御スタートレバー押えネジ Screw, release stopper lever	1	1B060-137-5	7	○△	
*1K146-016	147	フィルムガイドピン Screw, film guide	1		16	○	FM2
1K146-028	358	ミラーボックス止めネジ Screw, mirror cage	1	1B670-026-4 1B670-027-4	9	○△	
1K146-036-1	739	Tダイヤル止ネジ Set screw, shutter dial	3		12	○	
1K146-040	402	巻上レバー飾り環（白） Cover screw, film-advance lever (white)	1		3	○	
1K146-041	402	巻上レバー飾り環（黒） Cover screw, film-advance lever (black)	1			○	
1K146-047-1	499	ロックレバー軸 Axle, release lock lever	1		5	○	

部品番号 Part No.	補助番号 Ckt. No.	名称 Name	1台分個数 Pcs. per Unit	部組品番号 Assembly	参照図番 Figure	販売区分 Term of Delivery	備考 Remarks
*1K150-008	405	レバー軸ナット Nut, film-advance lever shaft	1	1B060-139-8	3	○△	FM2
1K156-020	374	着脱ボタン Lens release button	1	1B670-026-4 1B670-027-4	10	○△	
1K160-249	660	巻戻し軸座金 Washer, rewind shaft	1		6	○	
*1K160-253	687	目盛貼付環押え板 Retainer, ASA index ring	1	1B060-141-2	6	○△	
1K165-033	781	CP切換SW座金 Washer	2		14	○	
1K165-051	784	ベーク ワッシャー Washer	1	1B670-026-4 1B670-027-4	13	○△	
1K201-025-1	601	Tダイヤル環 Shutter dial	1		12	○	
1K206-011-1	603	モード切換ノブ Mode chang-over knob	1	1B670-023-9 1B670-039	15	○△	
1K206-013-2	404	巻上レバー指当て Knob, film-advance lever	1	1B206-014-1 1B206-016-1	3	○△	
1K206-015	32	アイピース駆動レバー Eyepiece shutter lever	1	1B670-023-9 1B670-039	15	○△	
1K206-017-1	290	絞り込みレバー Stop-down lever	1	1B670-026-4 1B670-027-4	11	○△	
1K208-021-1	632	上ロック解除釦 Button, shutter dial lock release	1	1B670-023-9 1B670-039	15	○△	
1K208-022-1	670	補正ロック釦 Button, exposure compensation dial lock	1	1B670-023-9 1B670-039	15	○△	
1K208-023	582	S 釦 Shutter release button	1	1B670-023-9 1B670-039	15	○△	

部品番号 Part No.	補助番号 Ckt. No.	名称 Name	1台分個数 Pcs.per Unit	部組品番号 Assembly	参照図番 Figure	販売区分 Term of Delivery	備考 Remarks
1K208-025	616	飾り釦 Shutter dial button	1		12	○	
*1K220-031	76	裏蓋着脱バネ Spring, camera back release	1	1B620-014-5	17	○△	FM2
*1K220-038-1	58	止め爪 バネ Spring, Latch B # 53	1		16	○	FM2
*1K220-039	467	スプロケット バネ Sprocket spring	1		1	○	FM2
1K220-089	357	EE信号ピン バネ Spring, EE signal pin	1	1B670-026-4 1B670-027-4	10	○△	
1K220-091	633	上ロック解除バネ Spring, shutter dial lock release	1	1B670-023-9 1B670-039	15	○△	
1K220-092-1	585	S釦バネ Spring, shutter button	1	1B670-023-9 1B670-039	15	○△	
1K220-095	378	着脱釦バネ Spring, lens release button	1	1B670-026-4 1B670-027-4	10	○△	40 F B # 730
*1K220-096-1 (1K220-096)	662	フリクション バネ Friction spring	1		6	○	35 F B # 662
1K220-097	569	MD軸バネ Spring, MD shaft	1		5	○	
*1K225-042-1	496	振り子バネ Pendulum spring	1		5	○	FM2
*1K225-051	305	遅延バネ Spring, delay segment gear	1	1B670-026-4 1B670-027-4	8	○△	FG
1K225-059-1	251	ミラー up バネ Mirror-up spring	1	1B060-137-5	7	○△	
1K225-063	154	モード バネ Mode changeover spring	1	1B150-018-1	12	○△	
1K220-130	636	クリックバネ Click spring	1			○	

部品番号 Part No.	補助番号 Ckt. No.	名称 Name	1台分個数 Pcs. per Unit	部組品番号 Assembly	参照図番 Figure	販売区分 Term of Delivery	備考 Remarks
1K225-064	391	fo レバー バネ fo lever spring	1	1B670-026-4 1B670-027-4	11	○△	
1K225-065	560	レリーズ板バネA Spring A, release plate	1		4	○	
1K225-066	561	レリーズ板バネB Spring B, release plate	1		4	○	
*1K230-025-1	545	後幕SWレバー バネ Spring, closing curtain switch lever	1		5	○	
*1K230-039	406	レバー戻し バネ Spring, film-advance lever reverse	1	1B060-139-8	3	○△	
*1K230-041	516	スプロ ストッパー戻しバネ Spring, sprocket stopper reverse	1	1B001-313-3	2	○△	
*1K230-054	216	掛り外しレバー バネ Spring, latch lever	1	1B060-137-5	7	○△	
*1K230-065-1 (1K230-065)	325	制御ギヤ バネ Spring, control gear	1	1B060-138-8	8	○△	
*1K230-067	332	45°受けレバー バネ Spring, 45° acceptor	1	1B060-138-8	8	○△	
1K230-087	206	ミラースタート バネ Spring, mirror-up start	1	1B060-137-5	7	○△	
1K230-088	222	連結レバー バネ Spring, coupling lever	1	1B060-137-5	7	○△	
1K230-089	226	シーソーレバー バネ Spring, see-saw lever	1	1B060-137-5	7	○△	
1K230-090	230	シャッターレリーズレバーバネ Spring, shutter release lever	1	1B060-137-5	7	○△	

部品番号 Part No.	補助番号 Ckt. No.	名称 Name	1台分個数 Pcs.per Unit	部組品番号 Assembly	参照図番 Figure	販売区分 Term of Delivery	備考 Remarks
1K230-091	234	制御スタートレバー バネ Spring, release control lever	1	1B060-137-5	7	○△	
1K230-093	271	チリトリ バネ Spring, mirror holder	1	1B670-026-4 1B670-027-4	9	○△	
1K230-094	292	絞り込みレバー バネ Spring, stop-down lever	1	1B670-026-4 1B670-027-4	11	○△	
1K230-097-2	162	Tフィルム用 バネ Spring, shatter speeds inner indicator	1	1B150-018-1	12	○△	
1K230-098-1	333	ダウン バネ Mirror down spring	1	1B670-026-4 1B670-027-4	8	○△	
1K230-099	348	Fmm信号レバー バネ Spring, Focal length (Fmm) signal lever	1	1B060-138-8	8	○△	
1K230-100	627	電源切換バネ Spring, power switch	1	1B060-084-1	12	○△	
1K230-101	444	レリーズ ロックレバー バネ Spring, release lock lever	1	1B060-139-8	3	○△	
1K230-102-1	500	ロックレバー バネ Spring, lock lever	1		5	○	
1K230-103	534	ミラーチャージレバー バネ Spring, mirror charge lever	1		5	○	
1K230-105	476	緩衝バネ Buffer spring	1			○	
*1K230-114	413	カウンター バネ Spring, frame counter	1	1B060-139-8	3	○△	FE2
*1K233-016-2 (1K233-016-1)	129	ペンタ押えバネ Spring, prism retainer	2		13	○	FM2
*1K240-064-1	656	クランク受けバネ Rewind crank spring	1		6	○	FM2

部品番号 Part No.	補助番号 Ckt. No.	名称 Name	1台分個数 Pcs.per Unit	部組品番号 Assembly	参照図番 Figure	販売区分 Term of Delivery	備考 Remarks
*1K240-065-1	394	バヨネット ばね Bayonet spring	1	1B670-026-4 1B670-027-4	10	○△	FM2
*1K240-118-2	102	シュー バネ(白) Shoe contact spring	1	1B670-023-9	15	○△	FG
1K240-151	105	ホットシューSW接片 Shoe switch contact	1	1B670-023-9 1B670-039	15	○△	
*1K240-156	124	スクリーン押えバネ Spring, focusing screen lock	1	1B670-026-4 1B670-027-4	11	○△	FE2
1K240-169	440	カウンターSW接片 Contact, frame counter switch	1	1B060-139-8	3	○△	
1K240-237	443	クリックレバー バネ Click lever spring	6	1B060-139-8	3	○△	
*1K240-215-1	102	シューバネ(黒) Shoe contact spring (black)	1	1B670-039		○△	FE2
*1K260-052-1 (1K260-052)	454	巻上ギヤ Film-advance gear	1		2	○	FM2
*1K260-056	463	スプロケット上ギヤ Sprocket upper gear	1		1	○	
1K260-076	389	fo ギヤ fo gear	1	1B670-026-4 1B670-027-4	11	○△	
1K273-002	385	fo 固定ギヤ fo retaining gear	1	1B670-026-4 1B670-027-4	11	○△	
*1K275-010-1 (1K275-010)	465	スプロケット Sprocket	1		1	○	FM2
*1K275-026-1 (1K275-026)	412	ラチェット Ratchet	1	1B060-139-8	3	○△	FE2
*1K300-034	461	スプロケット制限カム Sprocket stopper cam	1		1	○	FM2

部品番号 Part No.	補助番号 Ckt. No.	名称 Name	1台分個数 Pcs. per Unit	部組品番号 Assembly	参照図番 Figure	販売区分 Term of Delivery	備考 Remarks
*1K310-024	221	制御連結レバー Lever, shutter control coupling	1	1B670-026-4 1B670-027-4	9	○△	
1K310-037	554	メカシーソーレバー See-saw lever, mechanical release	1	1B670-026-4 1B670-027-4	11	○△	
*1K314-050	53	止め爪 B Latch B, camera back	1		16	○	FM2
*1K314-051-3 (1K314-051-1)	494	振り子 Pendulum	1		5	○	FM2
1K314-116	235	レリーズMg 連結レバー Lever, release magnet coupling	1	1B060-137-5	7	○△	
1K314-129-2	498	ロック レバー Lock lever	1		5	○	
1K314-131	539	ミラーチャージ レバー Mirror charge lever	1		5	○	
*1K340-020	491	カップリング カラー Set cam collar	1		1	○	FM2
1K340-051	566	MD軸受 Bearing, MD shaft	1		5	○	
1K340-052	581	かぶせレリーズ環 Shutter release button ring	1	1B670-023-9 1B670-039	15	○△	
*1K362-007-1	68	蝶番芯金B Hinge shaft B	1	1B620-014-5	17	○△	FM2
1K362-017	372	着脱ピン Lens release pin	1	1B670-026-4 1B670-027-4	10	○△	
*1K370-194	143	データ⊕接点 Data back contact (positive)	1		16	○	FM2
*1K370-358-1	145	データ⊖接点 Data back contact (negative)	1		16	○	FM2

部品番号 Part No.	補助番号 Ckt. No.	名称 Name	1台分個数 Pcs.per Unit	部組品番号 Assembly	参照図番 Figure	販売区分 Term of Delivery	備考 Remarks
*1K370-367	462	スプロケット軸 Sprocket shaft	1		1	○	
1K370-442-1	356	EE信号ピン Pin, EE signal	1	1B670-026-4 1B670-027-4	10	○△	
1K370-449	652	巻戻軸 Rewind shaft	1		6	○	
1K370-455	567	MD軸 Motor drive shaft	1		5	○	
1K370-456	583	レリーズ内釦 Release inner shaft	1	1B670-023-9 1B670-039	15	○△	
1K370-457-1	586	レリーズ下釦 Release lower shaft	1	1B670-023-9 1B670-039	15	○△	
*1K400-078	91	三脚ネジ Tripod socket	1		5	○	FM2
1K404-036	393	バヨネット Bayonet	1	1B670-026-4 1B670-027-4	10	○△	
*1K406-014	101	シュー座 Hot shoe contact	1	1B670-023-9 1B670-039	15	○△	FE2
*1K467-016	88	ターミナル キャップ Terminal cap	1		6	○	FM2
1K467-030	79	MDコネクター蓋 Motor drive contacts cover	1		5	○	
1K470-014	602	T目盛板 Shutter speeds inner indicator	1		12	○	
*1K475-158-1	414	枚数目盛板 Frame-counter dial	1	1B060-139-8	3	○△	FE2
*1K480-005	415	指標板 Frame-counter index	1	1B060-139-8	3	○△	FM2

部品番号 Part No.	補助番号 Ckt. No.	名称 Name	1台分個数 Pcs.per Unit	部組品番号 Assembly	参照図番 Figure	販売区分 Term of Delivery	備考 Remarks
1K550-008	131	ペンタ押え板 Plate, prism retainer	1		13	○	
1K576-036	126	視野枠 Finder field frame	1		13	○	
1K600-187	107	シュー座板 Plate, shoe mount	1	1B670-023-9 1B670-039	15	○△	
1K600-188-1	368	穴かくし板 Cover plate	2		13	○	
1K600-223	376	釦作動連結板 Plate, lens release button coupling	1	1B670-026-4 1B670-027-4	10	○△	
1K600-254	373	飾り遮光板 Light baffle plate	1	1B060-138-8	9	○△	
*1K610-168	51	蝶番 Camera back hinge	1		16	○	FM2
*1K610-170	283	ミラー裏側遮光板 Light baffle plate, mirror	1	1B670-026-4 1B670-027-4	9	○△	FM2
*1K610-172-1 (1K610-172)	529	AR解除バネ AR release spring	1		5	○	FM2
*1K610-173	138	電池アース接片 Battery earth contact	1		5	○	FM2
*1K610-270	445	スプロ制限解除板 Plate, sprocket stopper release	1	1B060-139-8	3	○△	FM
*1K610-271-1 (1K610-271)	452	面カム板バネ Spring, clutch cam	1		2	○	FM2
*1K610-272-2	451	面カム板 Clutch cam	1		2	○	FM2
*1K610-278	518	スプロ制限板バネ Spring, sprocket stopper	1	1B001-313-3	2	○△	FM2

部品番号 Part No.	補助番号 Ckt. No.	名称 Name	1台分個数 Pcs.per Unit	部組品番号 Assembly	参照図番 Figure	販売区分 Term of Delivery	備考 Remarks
1K610-266-1 (1K610-266)	497	振り子バネ掛け Spring hook, pendulum	1		5	○	FM2
1K610-316	291	絞り込みレバー ブッシュ Bush, stop-down lever	1	1B670-026-4 1B670-027-4	11	○△	
1K610-348	361	フレキ支え板 FPC retainer	1	1B670-026-4 1B670-027-4	1、2	○△	
1K610-353	392	fo、レバーばね掛け Spring hook, fo lever	1	1B670-026-4 1B670-027-4	11	○△	
1K610-359	54	止め爪カバー Latch cover	1		16	○	
1K610-365	588	レリーズ板バネ掛け Spring hook, release plate	1		4	○	
1K610-380-1	410	多重撮り連結レバー Lever, multi-exposure coupling	1	1B060-139-8	3	○△	
1K610-489	128	ラグ板 Lug			13	○	
1K620-063	125	プリズム ボックス Prism box	1	1B670-026-4 1B670-027-4	13	○△	
*1K625-007-2 (1K625-007-1)	42	枚数計 窓 Frame-counter window	1	1B670-023-9 1B670-039	15	○△	FM2
*1K630-081-1 (1K630-081)	144	データ⊕接点モールド Mold, data back contact (positive)	1		16	○	FM2
*1K630-085	471	スプロカラーAナット Nut, sprocket collar A	1		1	○	FM2
*1K630-114	470	スプロケットローラーA Sprocket roller A	1		1	○	FM2
1K630-149	346	Fmm信号レバーカラー Collar, Fmm signal lever	1	1B060-138-8	8	○△	

部品番号 Part No.	補助番号 Ckt. No.	名称 Name	1台分個数 Pcs.per Unit	部組品番号 Assembly	参照図番 Figure	販売区分 Term of Delivery	備考 Remarks
1K630-152-1	580	S釦 飾り環 Cover ring, shutter release button	1	1B670-023-9 1B670-039	15	○△	
*1K630-157	665	巻戻軸支え Rewind shaft tube	1		6	○	FE?
1K630-159	98	上ロック解除釦カバー Cover, shutter dial lock release button	1	1B670-023-9 1B670-039	15	○△	
1K640-196	477	ボール ケース Ball case				○	
*1K640-198	464	スプロケット上軸受 Bearing, sprocket upper	1		1	○	
*1K640-199	526	スプロ下メタル Bearing, sprocket lower	1		1	○	
*1K640-253	407	枚数計押え板 Frame counter retainer	1	1B060-139-8	3	○△	FM?
1K640-274	265	セルフレバー飾り環 Cover ring, self-timer lever	1	1B670-026-4 1B670-027-4	13	○△	
1K640-282	474	スプール軸受ケース Upper case, spool shaft bearing	1			○	
1K640-283	475	スプール軸受蓋 Lower case spool shaft bearing	1			○	
*1K640-298	29	連動環内筒 Spacer, aperture coupling ring	1	1B670-026-4 1B670-027-4	10	○△	FE?
1K640-404	381	連動環 Aperture coupling ring	1	1B640-017-4	10	○△	
*1K650-003-1 (1K650-003)	495	振り子偏心カラー Pendulum eccentric collar	1		5	○	FM?
*1K680-102-3 (1K680-102-1)	493	MD カップリング Motor drive coupling	1		1	○	FM?

部品番号 Part No.	補助番号 Ckt. No.	名称 Name	1台分個数 Pcs.per Unit	部組品番号 Assembly	参照図番 Figure	販売区分 Term of Delivery	備考 Remarks
*1K680-143	218	前後差調整モールド Adjuster, mirror angle	1	1B060-137-5	7	○△	FG
*1K680-169-2 (1K680-169)	428	巻上軸 Film-advance shaft	1	1B060-139-8	3	○△	FM2
*1K680-170-1 (1K680-170)	453	巻上カム Film-advance cam	1		2	○	
*1K680-172-1	456	面カム外しレバー Lever, clutch cam release	1		4	○	
1K680-211	384	fo レンズ片 Block, fo lens	1	1B670-026-4 1B670-027-4	11	○△	
1K680-214	651	巻戻軸受 Bearing, rewind shaft	1		6	○	
1K680-217	28	モールド帯 Retainer, printed circuit	1		13	○	
1K680-218	44	液晶明りとり窓 LCD window	1	1B670-023-9 1B670-039	15	○△	
1K680-238-1	172	LCD 押えモールド LCD retainer	1		14	○	
1K680-270	437	カウンタースィッチ座板 Plate, frame-counter switch	1	1B060-139-8	3	○△	
1K680-307	132	表示板スペーサー Spacer, LCD plate	1		12	○	
1K680-318	127	間隔枠 Spacer, screen frame	1		13	○	
1S110-005	1036	ショットキィーダイオード Diode 1SS97	2	1S020-007 1S045-013		○△	
1S268-002-1	173	LCD LCD	1		14	○	

部品番号 Part No.	補助番号 Ckt. No.	名称 Name	1台分個数 Pcs.per Unit	部組品番号 Assembly	参照図番 Figure	販売区分 Term of Delivery	備考 Remarks
1S705-037	114	絶縁シート Insulating sheet	1		4	○	W
1S758-001-1	175	コネクター Connector	2		14	○	
1S705-035	99	シャッター フレキ FPC, shutter control	1		4	○	
1S810-177	1071	リード線 Lead wire	1			X	W-0056BN
1S810-178	1072	リード線 Lead wire	1			X	W-0056PU
1S810-179	1073	リード線 Lead wire	1			X	W-0056BE
1S810-180	1074	リード線 Lead wire	1			X	W-0056RE
1S810-181	1075	リード線 Lead wire	1			X	W-0056BK
1S810-182	1076	リード線 Lead wire	1			X	W-0056YE
1S810-183	1077	リード線 Lead wire	1			X	W-0056GY
1S810-184	1078	リード線 Lead wire	1			X	W-0056BE
1S810-185	1079	リード線 Lead wire	1			X	W-0056BN
1S810-186	1080	リード線 Lead wire	1			X	W-0056WH
1S810-187	1081	リード線 Lead wire	1			X	W-0056GN

部品番号 Part No.	補助番号 Ckt. No.	名称 Name	1台分個数 Pcs.per Unit	部組品番号 Assembly	参照図番 Figure	販売区分 Term of Delivery	備考 Remarks
1S810-189	1083	リード線 Lead wire	1			X	W-0056YE
1S810-190	1084	リード線 Lead wire	1			X	W-0056BN
1S810-191	1085	リード線 Lead wire	1			X	W-0056PU
1S810-192	1086	リード線 Lead wire	1			X	W-0056BK
1S810-193	1087	リード線 Lead wire	1			X	W-0056WH
1S810-196	1090	リード線 Lead wire	1			X	W-0056OR
1S810-197	1091	リード線 Lead wire	1			X	W-0056GN
1S810-198	1092	リード線 Lead wire	1			X	W-0056GN
1S810-199	1093	リード線 Lead wire	1			X	W-0056PU
1S810-200	1094	リード線 Lead wire	1			X	W-0056PU
1S810-202	1096	リード線 Lead wire	1			X	W-0056GN
1S810-204	1098	リード線 Lead wire	1			X	W-0056GY
1S810-208	1102	リード線 Lead wire	1			X	W-0056OR
1S810-209	1103	リード線 Lead wire	1			X	W-0056GN

部品番号 Part No.	補助番号 Ckt. No.	名称 Name	1台分個数 Pcs.per Unit	部組品番号 Assembly	参照図番 Figure	販売区分 Term of Delivery	備考 Remarks
1S810-210	1104	リード線 Lead wire	1			X	W-0056BN
1S810-211	1105	リード線 Lead wire	1			X	W-0056OR
1S810-295	1106	リード線 Lead wire	1			X	W-0056BK
1S810-297	1108	リード線 Lead wire	1			X	W-0056WH
1S810-323	1100	リード線 Lead wire	1			X	W-0056PU
1S810-336		リード線 Lead wire	1			X	W-0056YE
1S810-349		リード線 Lead wire	1			X	W-0056WH
1S810-405		リード線 Lead wire	1			X	W-0056RE
1S810-406		リード線 Lead wire	1			X	W-0056GW
1S810-439		リード線 Lead wire	1			X	W-0056BK
A1-14014FA	703	コネジ Screw	3	1B060-141-2	6	○△	
A1-17015FB	734	コネジ Screw	5	1B670-026-4 1B670-027-4 1B060-138-8	8, 11	○△	

部品番号 Part No.	補助番号 Ckt. No.	名称 Name	1台分個数 Pcs.per Unit	部組品番号 Assembly	参照図番 Figure	販売区分 Term of Delivery	備考 Remarks
A1-17018FB	746	コネジ Screw	1		5	○	
A1-17025FB	708	コネジ Screw	8	1B670-026-4×4 1B670-027-4×4	11,14	○△	
A1-17030FA	701	コネジ Screw	10	1B670-026-4×4 1B670-027-4×4	6,12 13	○△	
A1-17030FC	753	コネジ Screw	3		.5	○	
A1-17035FB	726	コネジ Screw	2	1B670-026-4×2 1B670-027-4×2	9	○△	
A1-17040FA	764	コネジ Screw	4	1B670-023-9×4 1B670-039 ×4	15	○△	
A1-17040FB	711	コネジ Screw	2		14	○	
A1-17040FC	754	コネジ Screw (白)	2		15	○	
A1-20025FB	727	コネジ Screw	4	1B670-026-4×2 1B670-027-4×2	3, 5 10	○△	
A1-20028FB	719	コネジ Screw	3		6	○	
A1-20030BX	759	コネジ Screw	2		4	○	
A1-20022FB	747	コネジ Screw	3		1	○	
A1-20030FA	704	コネジ Screw	4		3,14	○	
A1-20040FB	755	コネジ Screw	5		13	○	

部品番号 Part No.	補助番号 Ckt. No.	名称 Name	1台分個数 Pcs.per Unit	部組品番号 Assembly	参照図番 Figure	販売区分 Term of Delivery	備考 Remarks
A1-20050FB	743	コネジ Screw	2		5	○	
A1-20060FT	758	コネジ Screw	1		4,16	○	
A2-17020FB	723	コネジ Screw	1	1B670-026-4 1B670-027-4	9	○△	
A2-17025FC	751	コネジ Screw	1		5	○	
A2-17030FB	720	コネジ Screw	2		16	○	
A2-17045FA	740	コネジ Screw	1		13	○	
B1-14020FA	712	コネジ Screw	1	1B670-026-4 1B670-027-4	12	○△	
B1-14025FA	772	コネジ Screw	1	1B060-139-2	3	○△	
B1-14045FA	710	コネジ Screw	2		14	○	
B1-17018FA	715	コネジ Screw	2	1B060-138-8	8	○△	
B1-17020FB	722	コネジ Screw	4	1B670-026-4×2 1B670-027-4×2	9 11,14	○△	
B1-17030FA	702	コネジ Screw	3		4,14	○	
B1-17025FB	779	コネジ Screw	1			○	
B1-17035FA	756	コネジ Screw	1		13	○	

部品番号 Part No.	補助番号 Ckt. No.	名称 Name	1台分個数 Pcs.per Unit	部組品番号 Assembly	参照図番 Figure	販売区分 Term of Delivery	備考 Remarks
B1-17035FB	713	コネジ Screw	1	1B670-026-4 1B670-027-4	9	○△	
B1-20025FA	742	コネジ Screw	1		5	○	
B1-20045FB	750	コネジ Screw	4		4,13	○	
B1-20045FA	745	コネジ Screw	1		5	○	
K1-14018FB	733	コネジ Screw	2	1B150-018-2×2	12	○△	
K1-14025FB	732	コネジ Screw	2	1B150-018-2×2	12	○△	
K2-14015FA	770	コネジ Screw	3		1	○	
G1-17055FB	765	コネジ Screw	1		13	○	
P1-10080FX	685	ピン Pin	1		6	○	
P3-16060SX	87	ピン Pin	2	1B670-026-4 1B670-027-4	4,13	○△	
S1-00800SX	717	トメワ Snap ring	1	1B670-026-4 1B670-027-4	10	○△	
S1-01200SX	716	トメワ Snap ring	7	1B060-138-8×6 1B670-023-9 1B670-039	8 ,12 15	○△	
S1-02000SX	783	トメワ Snap ring	1	1B670-023-9 1B670-039	15	○△	
S1-01200SB	729	トメワ Snap ring	1	1B150-018-1		○△	

部品番号 Part No.	補助番号 Ckt. No.	名称 Name	1台分個数 Pcs.per Unit	部組品番号 Assembly	参照図番 Figure	販売区分 Term of Delivery	備考 Remarks
*1G551-004-1	G1	ミラー Mirror	1	1B100-130	9	○△	
*1G950-004-1 (1G950-004)	G	フォーカシングスクリーン Focusing screen	1		9	○	FM_2

部組品番号 Assembly No.	補助番号 Ckt. No.	名称 Name	1台分個数 Pcs.per Unit	構成部品番品 Constituent Parts	参照図番 Figure	備考 Remarks
*1B001-085	B85	吊環 Eyelet	2	1K100-034 1K044-001	4, 13	FM2
*1B001-086	B47	圧板 Pressure plate	1	1K240-049 1K370-192×2 1K600-087	17	FM2
*1B001-099-2 (1B001-099-1)	B121	スクリーン枠 Focusing screen frame	1	1K240-068×2 1K370-244-1 1K620-032-1 ×4	9	FM2
*1B001-128-4 (1B001-128-2)	B522	スプール上ギャー Spool upper gear	1	1K078-007 1K220-064 1K260-055 1K600-151 1K620-047 1K630-083 1K630-113	1	FM2
*1B001-132-3 (1B001-132-1)	B4472	スプール軸 Spool shaft	1	1K370-368-2 1K230-044-1	1, 2	FM2
1B001-237-1	B27	半固定カバー Cover variable resistors	1	1K150-024 1K625-025-1	13	
1B001-238	B280	ミラー軸板 Mirror axle plate	1	1K370-421 1K370-422 1K610-315		
1B001-239-2	B294	絞り込み駆動レバー Lever, stop-down actuating	1	1K048-020 1K156-018-1 1K240-140 1K314-123-1	11	
1B001-240	B338	ミラー遮光板 Light baffle plate, mirror	1	1K240-088 1K680-229	9	
1B001-245	B551	レリーズマグネットユニット Unit, release magnet	1		12	
1B001-247-1	B628	圧接基板 Acceptor, FPC holder C	1	1K600-189 1K630-150-1×2	14	
1B001-248	B673	ASAブラシ ASA base plate brush	1	1K240-164 1K680-215	6	
1B001-249-2	B33	アイピース基板 Eypiece base plate		1K340-049-1 1K370-451 1K370-452 1K370-523 1K570-025-1 1K570-026 1K610-358	15	

部品番号 Assembly No.	補助番号 Ckt. No.	名称 Name	1台分個数 Pcs.per Unit	構成部品番号 Constituent Parts	参照図番 Figure	備考 Remarks
1B001-250-2	B100	シャッター Shutter	1		4	
1B001-252-1	B395	シャッター遮光板 Light baffle plate, shutter	1	1K115-672 1K115-673 1K115-674 1K370-465×2 1K610-492	9	
1B001-253-1	B541	後幕SW基板 Closing curtain switch	1	1K115-193 1K314-132 1K370-200-1 1K610-364	5	
1B001-254-1	B549	後幕SW基板 Closing curtain switch	1	1K240-170 1K240-171 1K240-173 1K680-223 1S810-177 1S810-179	5	
1B001-296-2	B103	シュー座モールド Shoe mount	1	1K370-434-1 1K370-435-1 1K680-205-1	15	
*1B001-313-5 (1B001-313-1)	B2501	下地板 Unit, film-advance mechanism	1	1K050-072 1K078-007×24 1K120-054 1K230-041 1K260-053-1 1K260-117-2 1K310-019 1K314-069 1K340-023 1K370-224-1 1K370-225-1 1K370-601-1 1K610-187 1K610-273-1 1K625-027-1 1K610-278 1K640-355 1K640-356 1K260-118	2	FE2
1B001-338	B362	圧接ゴムホルダーA FPC holder A	1	1K115-418 1K610-349	14	
1B001-339-1	B364	圧接ゴムホルダーB FPC holder B	1	1K115-419 1K610-350	14	
1B001-342	B630	圧接ゴムホルダーC FPC holder C	1	1K115-422 1K610-357	14	
1B001-343	B691	圧接ゴムホルダーD FPC holder D	1	1K115-426 1K610-363	14	
1B060-078-1	B136	電池ケース Battery chamber	1	1K048-022 1K240-050-1 1K370-521-1 1K610-174 1K680-208 1S810-349	4	
1B060-080-1	B255	ミラーSWモールド Mirror switch	1	1K115-394 1K240-137 1K240-138-1 1K240-139 1K600-182 1K680-200 1S810-191 1S810-192 1S810-193	7	

部組品番号 Assembly No.	補助番号 Ckt. No.	名称 Name	1台分個数 Pcs.per Unit	構成部品番号 Constituent Parts	参照図番 Figure	備考 Remarks
1B060-081-1	B297	絞り込みプリント板座 Base, stop-down printed circuit	1	1K048-021 1K610-317 1S700-024 1S810-190	11	
1B060-082-2	B336	SPDホルダー SPD holder	1	1K680-144-1 1S250-006 1S882-003	8	
1B060-083-1	B343	C.P切換スイッチ Meter mode switch	1	1K240-207 1K680-248 1S880-296	13	
1B060-084-2	B622	電源SW切換基板 Power switch	1	1K048-027 1K230-100 1K240-163 1K370-447 1K610-356 1K680-213 1S700-027 1S810-323 1S810-189	12	
1B060-085-2	B681	LEDホルダー LED holder	1	1K083-021-1 1K580-005 1K610-441-1 1S810-199 1S810-200 1S260-010	12	
1B060-105-1	B355	EE識別スイッチ EE lens switch	1	1K048-024 1K115-529×1 1K240-158 1K240-239 1K240-244 1K240-241 1K620-061 1K680-269 1S810-209 1S810-210 1S810-297	11	
1B060-106-5 (1B060-106-4)	B109	シュー接点モールド Shoe contact mold	1	1K240-152 1K240-153-3 1K240-154-3 1K240-155 1K680-206 1S113-004 1S810-204 1S810-203	13	
1B060-135	B185	グリップ Grip	1	1K010-027×3 1K110-102 1K380-013 1K620-059 1K680-209	16	
1B060-137-5 (1B060-137-4)	B2201	I基板 Base plate I 次ページへ続く	1	1K610-313-2 1K314-120 1K370-418 1K370-301 1K340-045 1K314-119-1 1K370-417 1K366-029 1K370-416 1K230-092 1K314-121 1K314-118 1K314-122-1 1K330-003 1K330-004 1K370-293 1K370-415 1K050-060 1K370-291 1K310-023-2 1K370-245-2 1K370-246-1 1K370-297 1K314-113 1K314-112 1K370-294 1K366-015 1K314-115	7, 9	

部品番号 Assembly No	地助番号 Ckt. No.	名称 Name	1台分個数 Pcs.per Unit	構成部品番号 Constituent Parts	参照図番 Figure	備考 Remarks
		続き 1 基板 Base plate 1		1K370-414 1K640-273 1K340-043 1K370-413 1K314-114 1K314-188 1K366-031 1K370-298 1K370-292 1K366-030 1K370-296-1 1K370-300 1K370-411 1K640-238 1K230-087 1K366-034-2 1K680-143 1K230-054 1K230-088 1K120-003 1K230-090 1K230-089 1K230-091 1K136-014 1K225-059-1 1K314-116 1K120-141 1K115-396 1B314-073-1 1B060-080-1		
1B060-136-1	B327	制御 Mg Aperture control magnet	1		8	
1B060-138-8 (1B060-138-7)	B2301	L基板 Mirror cage L	1	1K610-347-1 1K370-315-1 1K370-317-1 1K370-316-1 1K370-441 1K314-093 1K370-313-1 1K370-311-1×2 1K370-291-1 1K370-440-1 1K314-092 1K366-020 1K314-124 1K370-319 1K366-019-1 1K230-065-1 1K230-067 1K115-417 1K630-149 1K120-153 1K230-099 1K600-254 1S045-011-3 B1-17018FA×2 S1-01200SX×6 A1-17015FB×4 1B260-005 1B277-006 1B260-003 1B260-004-1 1B277-005 1B060-136-1 1B060-082-1 1B001-240 1B277-012 1B314-078-2 1B001-238		
1B060-139-8 (1B060-139-7)	B2416	上地板 Unit, film-advance lever 次ページへ続く	1	1K150-008 1K230-039 1K640-253 1K610-380-1 1K050-157 1K275-026-1 1K230-114 1K475-158-1 1K480-005 1K230-077 1K130-175-1 1K230-116-1 1K680-169-2 1K260-077 1K370-468 1K260-078 1K240-180 1K680-270 1K240-169 1K240-237 1K230-101 1K610-270 1K060-003 B1-14025FA 1K120-106 1S810-180 1S810-183 1S810-185	3	RPは巻止レバー及止ネジは除く

部組品番号 Assembly No.	補助番号 Ckt. No.	名称 Name	1台分個数 Pcs.per Unit	構成部品番品 Constituent Parts	参照図番 Figure	備考 Remarks
1B060-139-8 (1B060-139-7)	B2416	続き 上地板 Unit, film-advance lever		1S810-187 1S810-324 1K610-381-1 1K340-040-1 1K314-105 1K370-519-1 1K050-058 1K314-137 1K314-128 1K370-466 1K370-371-1×2 1K314-080 1K340-026 1K370-469-1 1K370-520-1 1K680-222 1K314-140 1K240-168 1K600-253 1K115-430-1	3	
1B060-140-3	B2604	Tダイヤル基板 Shutter dial unit	1	1K610-354 1K340-046 1K370-443-1 1K370-445 1K370-444 1K314-126 1K048-025×3 1K017-006 1K610-355 1K370-446-1 1K240-161 1K048-026-1×2 1K370-505 1K680-212-1 1K240-162 1K340-047 1K078-003×2 1K220-090 1K150-025 P3-12080SX 1K060-019 1K220-130	12	
1B060-141-5	B2661	ASAダイヤル基板 ASA dial unit	1	1K610-360-1 1K610-362-1 1K370-450 1K340-048-2 1K680-210 1K240-165 1K240-166 1K115-425×2 1K201-026 1K370-479 1K610-361 1S705-012-1 1K600-190 1K470-015 1K640-278 1K246-016 1K160-253 A1-14014FA 1K120-100 1K126-015 1K060-018 1B001-248	6	
1B100-128-2	B171	ミラー調整板B Mirror adjusting Plate B	1	1K610-344-1 1G550-015		
1B100-130	B272	ミラーチリトリ Mirror holder	1	1K610-177 1K240-054-1 1K240-055-1 1K370-217×2 1G551-004-1 1K115-220-3 1K600-183 1K370-420 1K370-204×4 1K600-198 1K370-464 1K115-391-1	9	

部品番号 Assembly No.	補助番号 Ckt. No.	名称 Name	1台分個数 Pcs.per Unit	構成部品番号 Constituent Parts	参照図番 Figure	備考 Remarks
1B100-177-4	B22	エプロン（白） Apron (white)	1	1K080-010-4 1K680-219 1G218-008 1K115-485	10	
1B100-213-2	B22	エプロン（黒） Apron (black)	1	1K080-010-2 1K680-219 1G218-008 1K115-485		
1B150-018-7	B2151	表示板 Unit, LCD viewfinder information	1	1K610-337-1 1G550-012 1K610-342-2 1S260-007 1S705-011 1K115-773 1K630-148 1K370-436 1K610-338-1 1K610-340 1K610-339 1K370-438 1K370-437-1 1K370-458 1K610-341 1 1K048-023 1K275-019 1K610-345-1 1K610-343-2 1G550-013 1K115-783 1K115-424 1G550-014 1K050-033 1K048-033 1B150-014-5 1K115-773 1B100-128-2 1B470-004-2 1K230-096 1K225-063 1K050-111 1K230-097-2 1K120-111 S1-01200SB K1-14050FB×2 K1-14025FB K1-14018FB×2 1S-810-196 S810-197 1S-810-198 S1-01200SB	12	
1B150-023-2	B120	接眼モールド Eyepiece mold	1	1K500-222-1 1K610-378 1K610-377-1×2 1K600-289 1K600-290 1S250-005 1G118-003×2 1S250-008 1G013-013	13	
1B206-013-1	B264	セルフレバー Self-timer lever	1	1K625-006	13	
1B206-014-2	B401	巻上げレバー（白） Film-advance lever (white)	1	1K206-012-2 1K610-185-1 1K206-013-2 G1-20050FC×2	3	
1B206-016-2	B401	巻上げレバー（黒） Film-advance lever (black)	1	1K206-020 1K610-185-1 1K206-013-2 G1-20050FC×2		
1B208-011-	B341	C.P切換釦 Meter mode button	1	1K208-028 1K680-271 1K220-101 1K044-005	13	
*1B260-003	B310	フライホイル Flywheel	1	1K640-239 1K050-062 1K260-033 1K050-083 1K246-008	8	FG

部組品番号 Assembly No.	補助番号 Ckt. No.	名称 Name	1台分個数 Pcs.per Unit	構成部品番品 Constituent Parts	参照図番 Figure	備考 Remarks
*1B260-004-1 (1B260-004)	B319	制御セグメントギヤ Aperture control segment gear	1	1K260-034-1 1K340-032	8	FG
*1B260-005	B302	セグメント遅延ギヤ Delay segment gear	1	1K260-030 1K340-031	8	FG
1B273-001-1	B386	fo ブラシギヤ fo brush gear	1	1K273-005-1 1K240-160 1K610-352	11	
*1B277-005	B323	制御ギヤ Aperture control gear	1	1K260-036 1K260-037-1	8	FG
*1B277-006	B308	遅延ギヤ Delay gear	1	1K260-031 1K260-032	8	FG
1B277-012	B340	制御ラチェット Aperture control ratchet	1	1K275-018 1K260-035	8	
*1B300-007-7 (1B300-007-1)	B480A	セットカムA Set cam A	0～1	1K625-008-4 1K370-227 1K630-087-1 1K600-101-2	1	FM2
*1B300-008-8 (1B300-008-2)	B480B	セットカムB Set cam B	0～1	1K625-008-4 1K370-227 1K630-087-1 1K600-102-3	1	FM2
*1B300-009-8 (1B300-009-1)	B480C	セットカムC Set cam C	0～1	1K625-009-5 1K370-227 1K630-087-1 1K600-101-2	1	FM2
*1B300-010-9 (1B300-010-2)	B480D	セットカムD Set cam D	0～1	1K625-009-5 1K370-227 1K630-087-1 1K600-102-3	1	FM2
1B310-029	B223	絞り制御横軸 Aperture control shaft	1	1K370-412 1K310-030 1K630-104 1K370-314	9	
1B310-030	B688	開閉ロックレバー Lever, rewind knob lock	1	1K310-038 1K225-045	6	
*1B314-049	B654	巻戻クランク Rewind crank	1	1K625-010 1K201-014 1K370-240	6	FM2
1B314-073-1	B236	制御スタートレバー Control start lever	1	1K 14-117 1K340-044-1	7	
1B314-074	B268	セルフカム Self-timer cam	1	1K610-314 1K156-017	13	

部組品番号 Assembly No.	補助番号 Ckt. No.	名称 Name	1台分個数 Pcs.per Unit	構成部品番品 Constituent Parts	参照図番 Figure	備考 Remarks
1B314-075-1	B535	シャッターチャージレバー Shutter charge lever	1	1K314-054-1 1K370-198 1K370-199-1 1K640-317	1	
1B314-076-1	B544	二重巻上防止レバー Lever, double exposure preventing	1	1K314-133 1K340-050-1	5	
1B314-077	B552	メカレリーズレバー Mechanical release lever	1	1K314-134 1K366-033	11	
1B314-078-2	B349	Fmm 信号レバー Focal length (Fmm) signal lever	1	1K314-125-1 1K240-157-1 1K048-052	8	
1B314-079-2	B556	レリーズ板 A Release plate A	1	1K314-135-1 1K370-453 1K048-028 1K240-172 1K314-136 1K370-454	4	
1B340-001-2	B4474	スプール軸受 Bearing, spool shaft	1	1K078-007×8 1K640-196 1K640-201-1 1K640-202	1	FM?
*1B400-001-2 (1B400-001-1)	B77	シンクロターミナル Sync terminal	1		6	FM?
*1B467-007-2 (1B467-007-1)	B137	電池キャップ Battery chamber lid	1	1K467-017-2 1K630-082		FM?
1B470-004-2	B164	Tフィルム Shatter speeds inner indicator	1	1K470-013-1 1K275-017-2 1K370-439-1 1K165-026 1K115-423-1	1, 2	
*1B620-014-6 (1B620-014-2)	B25	裏蓋 Camera back	1	1K620-046-3 1K370-193-1×4 1K600-079 1K370-176-1 1K370-580×2 1K240-033-1 1K610-280 1K370-578×2 1K362-014 1K610-163 1K370-577×3 1K362-007-1 1K680-098-2 1K115-301-1 1K1 5-154 1K115- 55 1K115-156 1K115-157 1K123-034 1K220-031 1K115-715	17	FM?
*1B630-009	B457	スプール Spool	1	1K630-116 1K630-115 1K640-256		
1B640 017-4 (1B640-017-3)	B382	絞り連動環 B Aperture coupling B	1	1K240-159-2 1K640-404	10	

部組品番号 Assembly No.	補助番号 Ckt. No.	名称 Name	1台分個数 Pcs.per Unit	構成部品番品 Constituent Parts	参照図番 Figure	備考 Remarks
1B670-014	B24	底カバー（白） Bottom cover（white）	1	1K620-062　1K640-187-1 1K640-279　1K370-189 1K640-188　1K060-005-1	5	
1B670-025	B24	底カバー（黒） Bottom cover（black）	1	1K620-070　1K640-187-1 1K640-279　1K370-189 1K640-188　1K060-005-1		
1B670-023-9 (1B670-023-8)	B23	上カバー（白） Top cover（white）	1	1B001-249-2　1B001-296-2 1K670-016-1　1K625-007-2 1K680-218　1K406-014 1K240-118-2　1K240-151 1K600-187　1K115-412 1K115-603　1K083-024-1 1K630-152-1　1K340-052 1K208-023　1K370-456 1K040-001-1　1K220-092-1 1K370-457-1　1K050-115×0～3 1K206-015　1K120-103 1K630-159　1K208-021-1 1K220-091　S1-01200SX 1K206-011-1　1K083-019 1K208-022-1　S1-02000SX 1K083-022　A1-17040FA×4 1K050-153	15	
1B670-039 (1B670-024-9)	B23	上カバー（黒） Top cover（brack）	1	1B001-249-2　1B001-296-2 1K670-026-1　1K625-007-2 1K680-218　1K406-014 1K240-215-1　1K240-151 1K600-187　1K115-412 1K630-152-1　1K083-024-1 1K208-023　1K340-052 1K040-001-1　1K370-456 1K370-457-1　1K220-092-1 1K206-015　1K050-115×0～3 1K630-159　1K120-103 1K220-091　1K208-021-1 1K206-011-1　S1-01200SX 1K208-022-1　1K083-043 1K083-044　S1-02000SX 1K050-153　A1-17040FA×4		
1B670-033-5 (1B670-026-9)	B2026	前ボディ（白） Unit, front plate（white） 次ページへ続く	1	1B100-177-4　1B001-085 1B206-013-1　1B314-074 1B001-239-2　1B060-081-1 1B208-011　1B060-083 1B060-105-1　1B640-017-4 1B273-001-1　1B314-077 1B060-084-2　1B060-085-2 1S017-004　1S017-005 1B150-018-7　1B060-140-3 1B060-137-5　1B060-138-8	7 10 11 12 13	

部組品一覧表 Assembly List

FAA16001-R. 3130. A

部組品番号 Assembly No.	補助番号 Ckt. No.	名称 Name	1台分個数 Pcs.per Unit	構成部品番品 Constituent Parts	参照図番 Figure	備考 Remarks
1B670-033-5 (1B670-026-9)	B2026	前ボディ(白) Unit, front plate (white) 前ページより続き	1	1B001-099-2 1B310-029 1B100-130 1B001-252-1 1K310-024 1K060-010 1K225-051 1K230-098-1 1K050-022 1K060-008 1K230-093 A2-17020FB 1K670-017-1 1K640-298 P3-16060SX 1K240-156 1K620-063 1K130-084 1K610-170 1K115-191-1 1K130-123 1K120-098 1K206-017-1 1K610-316 1K230-094 1K370-442-1 1K220-089 1K146-028 1K610-348 1K362-017 1K156-020 1K600-223 1K130-140 1K220-095 1K225-075-1 1K370-567 1K273-002 1K680-211 1K225-064 1K260-076 1K404-036 1K610-353 1B001-245 1K240-065-1 1K130-133 1K310-037 A1-17030FA×3 1K130-142 B1-14020FA A1-17025FB×4 S1-00800SX B1-17035FB A1-17035FB×2 B1-17020FB×2 1K120-093×2 A1-20025FB×2 1K123-042×2 1K123-039×4 1K050-029～1K050-048×0～4 B2-17045FA 1K120-009×2 1K120-102-1 1K120-142 1K165-051 1 1K115-658×4 1K115-660×2 1K640-274 A1-17015FB 1K100-051		
1B670-034-5 (1B670-027-9)	B2026	前ボディ(黒) Unit, front plate (black) 次ページに続く	1	1B100-213-1 1B001-085 1B206-013-1 1B314-074 1B001-239-2 1B060-081-1 1B208-011 1B060-083 1B060-105-1 1B640-017-2 1B273-001-1 1B314-077 1B060-084-2 1B060-085-2 1S017-004- 1S017-005 1B150-018-7 1B060-140-3 1B060-137-4 1B060-138-6 1B001-099-2 1B310-029 1B100-130 1B001-252-1 1K310-024 1K060-010 1K225-051 1K230-098-1 1K050-022 1K060-008 1K230-093 A2-17020FB 1K670-017-1 1K640-298 P3-16060SX 1K240-156 1K620-063 1K130-084 1K610-170 1K115-191-1 1K130-123 1K120-098 1K206-017-1 1K610-316 1K230-094 1K370-442-1		

部組品番号 Assembly No.	補助番号 Ckt. No.	名称 Name	1台分個数 Pcs.per Unit	構成部品番号 Constituent Parts	参照図番 Figure	備考 Remarks
1B670-034-5 (1B670-027-9)	B2026	前ボディ（黒） Unit, front plate (black)	1	1K220-089　1K146-028 11K610-348　1K362-017 1K156-020　1K600-223 1K130-140　1K220-095 1K225-075-1　1K370-567 1K273-002　1K680-211 1K225-064　1K260-076 1K404-036　1K610-353 1B001-245　1K240-065-1 1K130-133×2　1K310-037 A1-17030FA×3　1K130 B1-14020FX　A1-17025FB×4 S1-00800SX　B1-17035FB A1-17035FB×2　B1-17020FB×2 1K120-093×2　A1-20025FB×2 1K123-042×2　1K123-039×4 1K050-029～1K050-048×0～4 B2-17045FA　1K120-009×2 1K120-157　1K120-142 1K165-051　1K115-658×4 1K115-660×2　1K640-274 A1-17015FB　1K100-051		
1S017-004	B1003	fφ FPC FPC, fo	1	1K625-024 1S705-017	11	
1S017-005	B1004	f-φFPC FPC, f-fo	1	1S705-018 1S700-041	10	
1S017-007	B1005	上地 FPC FPC, film-advance lever unit	1	1S705-030 1S700-058	3	
1S020-004	B1002	ASA/LCD FPC FPC, ASA dial/LCD viewfinder information	1	1S705-016　1S700-040 1S380-001　1S335-016×2 1S335-021×4　1S310-025 1S310-028　1S700-045 1S210-003	14	
1S020-007-1	B31001	FPC

部組品番号 Assembly No.	補助番号 Ckt. No.	名称 Name	1台分個数 Pcs.per Unit	構成部品番品 Constituent Parts	参照図番 Figure	備考 Remarks
1S020-007-1	B31001	前ページより続く FPC	1	1S210-004 1S700-046 1K115-465 1K048-030×5 1S110-005 1S300-068 1K240-174 1K048-029 1S700-042 1S300-064 1S340-022 1S700-050 1S700-051	14	
1S045-011-3	B350	Fmm信号プリント板 Printed circuit, Fmm signal	1	1S700-025-1 1S810-207 1S810-208	8	
1S045-012	B589	レリーズSW基板 Base plate, release switch	1	1S700-028 1S810-182 1S810-184	4	
1G013-013	L 1	接眼レンズ Eyepiece lens	1	1G104-020 1G247-019	13	
1G080-003	L 2	プリズム Pentagonal prism	1	1G415-005 1G480-013×2	1 13	
1S045-013		ダイオードケーブル Diode cable	1	1S110-005 1S720-039 1S810-460 1S810-461		